宁波莱科液压器材有限公司

Ningbo Laike Hydraulics Co.,Ltd

COMPANY PROFILE

公司简介

Ningbo Laike Hydraulics Co., Ltd. is located in the coastal city - Ningbo. We are a manufacturer specialized in designing, manufacturing and selling fittings. We boast solid technology background, a skilled employee team and advanced manufacturing methods. Our products are produced under ISO9001:2000 quality control system. With complete new systems and efficient management, as well as good quality products, our firm is widely welcomed by customers and is praised as a modernized hardware manufacturing company.

Our company produces all kinds of Hydraulic fitting,Hydraulic hose fitting,Ferrule,Hydraulic Adapter, Hydraulic connection,Flange,Hydraulic coupling ,hose assemblies, and other related products, which are widely used in mining, machinery, transportation, shipping and oil industries. And OEM/ODM are welcomed.Our fittings feature good structures and are well designed, and all our bent-shaped joints are manufactured to avoid the possible leakage during welding. We strictly test products before sending them to customers and provide a reliable guarantee in terms of quality. In order to make our products more competitive, we ensure the inspection to make sure customers will be 100% satisfied.

We set "*first-class design, first-class products, and first-class service*"

as our operation philosophy. We believe that our products will be your best choices.

宁波莱科液压器材有限公司座落于现代化的海滨城市--宁波。是一家致力于液压管件研制、开发与制造的专业公司。公司汇集了业界优秀的专业人才，引进先进的企业管理理念和技术，以精湛的生产工艺和严格的质量管理，为客户制造各种高质量的流体连接件产品。在质量体系的全面规范下，每一个零部件和产品的质量均处于有效的控制之中。同时，公司使用 ERP 系统管理采购、生产、销售、财务各环节，使公司的供应链流程更加通畅。

我公司生产的液压软管接头、过渡接头和软管总成等产品广泛应用于矿山、机械、交通、船舶和油田等行业。所生产的软管接头具有结构优良，设计先进的特点，全部弯形接头都采用整体制造，避免了焊接处可能漏油的缺点；为客户提供的各款软管总成，都经过严格测试，在品质方面提供可靠保证。为了使我们的产品在同行中更具竞争力，所有产品在出厂前均经过严格的出厂检验，确保出厂的产品让客户 100%满意。

我们以“一流的设计，一流的产品，一流的服务”作为公司的经营理念，我们深信我公司的产品一定会成为顾客们的最佳选择。

公司地处宁波鄞州横溪工业区，地理位置优越，交通便利，欢迎各位客商光临洽谈。

Company

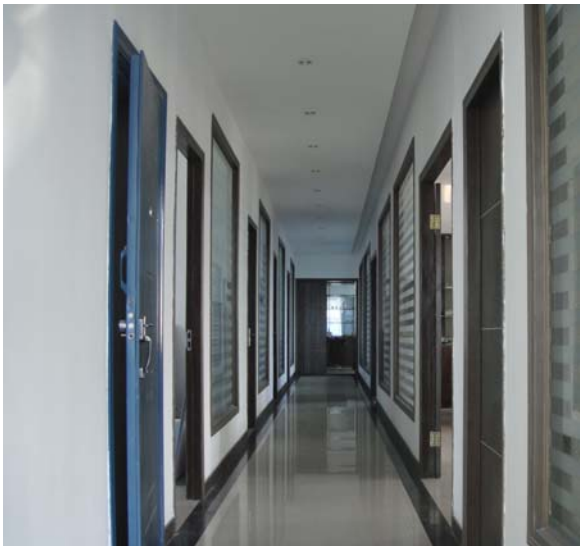

Office

first-class design, first-class products, and first-class service

Warehouse

Office

Contact
Ningbo Laike Hydraulics Co., Ltd.

Contact: Ms. Keyi
Email: admin@nblaike.cn
Skype: laikehydraulics-sale5
Mobile/WhatsApp: +86 158 8858 8126
Tel: +86 574 8847 2489
Fax: +86 574 8847 1696
Web: www.nblaike.cn
Add.: 298 Qishan Rd., Hengxi Industrial Zone, Yinzhou, Ningbo, P. R. China

Notice:If you have the electrical version,please add 23 to the page number for quick reaching.

目录
INDEX

类别 TYPE	代号 PART NO	页次 PAGE
公制外螺纹O型圈平面密封 METRIC MALE O-RING	1E	1
90°公制外螺纹O型圈平面密封 90°METRIC MALE O-RING	1E9	2
90°公制外螺纹O型圈平面密封 90°METRIC MALE O-RING	2E9	2
公制外螺纹O型圈平面密封堵头 METRIC MALE O-RING PLUG	4E	3
公制内螺纹平面堵头 METRIC FEMALE FLAT FACE PLUG	9E	4
公制外螺纹O型圈平面密封过板接头 METRIC MALE O-RING BULKHEAD	6E	4
90°公制外螺纹O型圈平面密封过板接头 90°METRIC MALE O-RING BULKHEAD	6E9	5
公制外螺纹O型圈平面密封重系列 METRIC MALE O-RING	1EH	5
45°公制外螺纹O型圈平面密封/可调向柱端重系列 45°METRIC MALE O-RING/ADJUSTABLE STUD	1EH4-OG	6
90°公制外螺纹O型圈平面密封/可调向柱端重系列 90°METRIC MALE O-RING/ADJUSTABLE STUD	1EH9-OG	6
公制外螺纹O型圈平面密封/60 °内锥六角端面组合垫圈 METRIC MALE O-RING/60°SEAT BONDED SEAL	1EM	7
公制外螺纹O型圈/布锥管外螺纹 METRIC MALE O-RING/NPT MALE	1EN	7
公制外螺纹O型圈/英锥管外螺纹 METRIC MALE O-RING/BSPT MALE	1ET	8
公制外螺纹O型圈平面密封/焊接管 METRIC MALE O-RING/BUTT-WELD TUBE	1EW	9
90°公制外螺纹O型圈平面密封/焊接管 90°METRIC MALE O-RING/BUTT-WELD TUBE	1EW9	9
公制外螺纹O型圈平面密封/英管螺纹组合垫密封 METRIC MALE O-RING/BSP MALE DIN 3852-2 TYREA	1EZ	10
焊接管/公制内螺纹O型圈平面密封 BUTT-WELD TUBE/METRIC FEMALE O-RING	2WE	11
公制外螺纹O型圈平面密封四通接头 METRIC MALE O-RING CROSS	XE	12
公制外螺纹O型圈平面密封三通接头 METRIC MALE O-RING TEE	AE	12
公制外螺纹O型圈/公制内螺纹平面密封三通接头 METRIC MALE O-RING/METRIC FEMALE TEE	BE	13
公制外螺纹O型圈/公制内螺纹平面密封三通接头 METRIC MALE O-RING/METRIC FEMALE TEE	CE	13

目录
INDEX

类别 TYPE	代号 PART NO	页次 PAGE
公制外螺纹O型圈平面密封/可调向柱端重系列主支三通 METRIC MALE O-RING/METIRC MALE ADJUSTABLE STUD S-SERIES RUN TEE	AEEH-OG	14
公制外螺纹O型圈平面密封/可调向柱端重系列分支三通 METRIC MALE O-RING/METIRC MALE ADJUSTABLE STUD S-SERIES BRANCH TEE	AEHE-OG	14
90°公制外螺纹O型圈平面密封过板接头 90°METRIC MALE O-RING BULKHEAD RUN TEE	AEE6E	15
公制外螺纹O型圈平面密封过板分支三通 METRIC MALE O-RING BULKHEAD BRANCH TEE	AE6EE	15
公制外螺纹24°轻系列变径 METRIC MALE 24 °L.T.REDUCERS	1C	16
公制外螺纹24°轻系列 METRIC MALE 24 °L.T.	1C	17
公制外螺纹24°重系列 METRIC MALE 24 °H.T.	1D	17
公制外螺纹24°重系列变径 METRIC MALE 24 °H.T. REDUCERS	1D	18
90°公制外螺纹24 °轻系列 90°METRIC MALE 24 °L.T.	1C9	19
90°公制外螺纹24 °重系列 90°METRIC MALE 24 °H.T.	1D9	19
公制内螺纹24°/公制外螺纹24°轻系列 METRIC FEMALE 24 °/METRIC MALE 24 °L.T.	2C	20
公制内螺纹24°/公制外螺纹24°重系列 METRIC FEMALE 24 °/METRIC MALE 24 °H.T.	2D	21
90°公制外螺纹24 °/公制外螺纹24°轻系列 90°METRIC FEMALE 24 °/METRIC MALE 24 °L.T.	2C9	22
90°公制外螺纹24 °/公制外螺纹24°重系列 90°METRIC FEMALE 24 °/METRIC MALE 24 °H.T.	2D9	22
公制内螺纹24°轻系列 METRIC FEMALE 24 °L.T.	3C	23
公制内螺纹24°重系列 METRIC FEMALE 24 °H.T.	3D	23
公制螺纹24°轻系列堵头 METRIC MALE 24°L.T. PULG	4C	24
公制螺纹24°重系列堵头 METRIC MALE 24°H.T. PLUG	4D	24
公制外螺纹24°轻系列过板接头 METRIC MALE 24°L.T. BULKHEAD	6C	25
公制外螺纹24°重系列过板接头 METRIC MALE 24°H.T. BULKHEAD	6D	25
90°公制外螺纹24 °轻系列过板接头 90°METRIC MALE 24 °L.T. BULKHEAD	6C9	26

目录
INDEX

类别 TYPE	代号 PART NO	页次 PAGE
90°公制外螺纹24 °重系列过板接头 90°METRIC MALE 24 °H.T. BULKHEAD	6D9	26
公制螺纹锁母 METRIC LOCK NUT	8C	27
公制内螺纹24°轻系列堵头 METRIC FEMALE 24 °L.T. PLUG	9C	28
公制内螺纹24°重系列堵头 METRIC FEMALE 24 °H.T. PLUG	9D	28
公制外螺纹24°轻系列/布锥管外螺纹60 ° METRIC MALE 24 °L.T./NPT MALE 60 °	1CN	29
公制外螺纹24°重系列/布锥管外螺纹60 ° METRIC MALE 24°H.T./NPT MALE 60 °	1DN	30
90°公制外螺纹24 °轻系列/布锥管外螺纹60 ° 90°METRIC MALE 24 °L.T./NPT MALE 60°	1CN9	31
90°公制外螺纹24 °重系列/布锥管外螺纹60 ° 90°METRIC MALE 24 °H.T./NPT MALE 60 °	1DN9	32
公制外螺纹24 °轻系列/英锥管外螺纹60 ° METRIC MALE 24°L.T./BSPT MALE 60 °	1CT	33
公制外螺纹24°重系列/英锥管外螺纹60 ° METRIC MALE 24°H.T./BSPT MALE 60 °	1DT	34
90°公制外螺纹24°轻系列/英锥管外螺纹60 ° 90°METRIC MALE 24 °L.T./BSPT MALE 60 °	1CT9	35
90°公制外螺纹24°/英锥管外螺纹60 °重系列 90°METRIC MALE 24 °/BSPT MALE 60 ° H.T.	1DT9	36
公制外螺纹24°轻系列/英管螺纹或60 °锥面组合垫密封 METRIC MALE 24 °SEAL L.T./BSP MALEDOUBLE 60 °SEAT BONDED SEAL	1CB	37
公制外螺纹24°重系列/英管螺纹或60 °锥面或组合垫密封 METRIC MALE 24 °SEAL H.T./BSP MALE DOUBLE 60 °SEAT BONDED SEAL	1DB	38
90°公制外螺纹24 °轻系列/英管螺纹60 °锥面密封 90°METRIC MALE 24 °L.T./BSP MALE 60 °CONE	1CB9	39
90°公制外螺纹24 °重系列/英管螺纹60 °锥面密封 90°METRIC MALE 24 °H.T./BSP MALE BSP MALE 60 °CONE	1DB9	40
公制外螺纹24 °轻系列/英管螺纹60 °内锥面或胶垫密封 METRIC MALE 24°L.T./BSP THREAD WITH CAPTIVE SEAL	1CB-WD	41
公制外螺纹24 °重系列/英管螺纹60 °内锥面胶垫密封 METRIC MALE 24°H.T./BSP THREAD WITH CAPTIVE SEAL	1DB-WD	42
公制外螺纹24°轻系列/英管外螺纹O型圈密封 METRIC MALE 24°L.T./BSP MALE O-RING	1CG	43
公制外螺纹24°重系列/英管外螺纹O型圈密封 METRIC MALE 24°H.T./BSP MALE O-RING	1DG	44
45°英管螺纹24°轻系列可调向柱端 45°BSP THREAD 24°L.T.ADJUSTABLE STUD.	1CG4-OG	45

目录
INDEX

类别 TYPE	代号 PART NO	页次 PAGE
45°英管螺纹24°重系列可调向柱端 45°BSP THREAD 24°H.T.ADJUSTABLE STUD.	1DG4-OG	45
90°英管螺纹24°轻系列可调向柱端 90°BSP THREAD 24°L.T.ADJUSTABLE STUD	1CG9-OG	46
90°英管螺纹24°重系列可调向柱端 90°BSP THREAD 24°H.T.ADJUSTABLE STUD.	1DG9-OG	46
公制外螺纹24°轻系列/六角端面O型圈密封 METRIC MALE 24 °L.T./METRIC MALE WITH O-RING	1CH	47
公制外螺纹24°重系列/外螺纹六角端面O型圈密封 METRIC MALE 24 °H.T./METRIC MALE WITH O-RING	1DH	48
45°公制外螺纹24 °轻系列可调向柱端 45°METRIC MALE 24 °L.T.ADJUSTABLE STUD	1CH4-OG	49
45°公制外螺纹24°重系列可调向柱端 45°METRIC MALE 24 °H.T.ADJUSTABLE STUD	1DH4-OG	49
90°公制外螺纹24°轻系列可调向柱端 90°METRIC MALE 24°L.T.ADJUSTABLE STUD	1CH9-OG	50
90°公制外螺纹24 °重系列可调向柱端 90°METRIC MALE 24 °H.T.ADJUSTABLE STUD	1DH9-OG	50
公制外螺纹24°轻系列/美制JIC74 °锥密封 METRIC MALE 24 °L.T./JIC 74 °CONE SEAL	1CJ	51
公制外螺纹24°重系列/美制JIC74 °锥密封 METRIC MALE 24 °H.T./JIC 74 °CONE SEAL	1DJ	52
公制外螺纹24°轻系列/60°内锥面或组合垫密封 METRIC MALE 24 °L.T./60°CONE BONDED SEAL	1CM	53
公制外螺纹24°轻系列/60°内锥面或胶垫密封 METRIC MALE 24 °L.T./60°CONE CAPTIVE SEAL	1CM-WD	54
公制外螺纹24°重系列/60°内锥面或组合垫密封 METRIC MALE 24°H.T./60°CONE BONDED SEAL	1DM	55
公制外螺纹24 °重系列/60°内锥面或胶垫密封 METRIC MALE 24°H.T./60°CONE CAPTIVE SEAL	1DM-WD	55
公制外螺纹24°轻系列/美制外螺纹O型圈密封 METRIC MALE 24°L.T./SAE MALE O-RING	1CO	56
公制外螺纹24°重系列/美制外螺纹O型圈密封 METRIC MALE 24°H.T./SAE MALE O-RING	1DO	57
90°公制外螺纹°公制外螺纹24 °轻系列/美制外螺纹可调向柱端 90°METRIC MALE 24°L.T./SAE MALE ADJUSTABLE STUD	1CO9-OG	58
90°公制外螺纹24°重系列/美制外螺纹可调向柱端 90°METRIC MALE 24°H.T./SAE MALE ADJUSTABLE STUD	1DO9-OG	58
公制外螺纹24°轻系列/焊接接头 METRIC MALE 24°L.T./WELD FITTINGS	1CW	59
公制外螺纹24°重系列/焊接接头 METRIC MALE 24°H.T./WELD FITTINGS	1DW	59

目录
INDEX

类别 TYPE	代号 PART NO	页次 PAGE
公制螺纹24°轻系列/英管螺纹60 °锥面组合垫密封 METRIC FEMALE 24 °L.T./BSP MALEDOUBLE 60 °SEAT BONDED SEAL	2BC-WD	60
公制螺纹24°重系列/英管螺纹60 °锥面组合垫密封 METRIC FEMALE 24 °H.T./BSP MALEDOUBLE 60 °SEAT BONDED SEAL	2BD-WD	60
美制JIC 74°锥密封/公制内螺纹24 °锥O型圈密封轻系列 JIC 74°CONE SEALING/METRIC FEMALE 24 °CONE O-RING SEALING L.T.	2JC	61
美制JIC 74°锥密封/公制内螺纹24 °锥O型圈密封重系列 JIC 74°CONE SEALING/METRIC FEMALE 24 °CONE O-RING SEALING H.T.	2JD	62
公制螺纹24°轻系列锥O型圈/英管螺纹 O型圈密封 METRIC FEMALE 24 °L.T.CONE O-RING/BSP MALEO-RING	2GC	63
公制螺纹24°重系列锥O型圈/英管螺纹 O型圈密封 METRIC FEMALE 24 °H.T.CONE O-RING/BSP MALEO-RING	2GD	63
公制螺纹胶垫密封/公制内螺纹24 °锥面O型圈密封轻系列 METRIC THREAD /METRIC FEMALE 24 °CONE O-RING SEAL L.T.	2MC-WD	64
公制螺纹胶垫密封/公制内螺纹24 °锥面O型圈密封重系列 METRIC THREAD /METRIC FEMALE 24 °CONE O-RING SEAL H.T.	2MD-WD	64
公制螺纹24°轻系列/英管内螺纹 METRIC MALE 24°L.T./BSP FEMALE	5CB	65
公制螺纹24°重系列/英管内螺纹 METRIC MALE 24°H.T./BSP FEMALE	5DB	66
公制螺纹24°轻系列/公制内螺纹 METRIC MALE 24°L.T./METRIC FEMALE	5CM	67
公制螺纹24°重系列/公制内螺纹 METRIC MALE 24°H.T./METRIC FEMALE	5DM	67
公制外螺纹24 °轻系列三通 METRIC MALE 24°L.T. TEE	AC	68
公制外螺纹24 °重系列三通 METRIC MALE 24°H.T. TEE	AD	68
公制内螺纹24 °/公制外螺纹24°轻系列三通 METRIC FEMALE 24 °/METRIC MALE 24 °L.T. TEE	BC	69
公制内螺纹24°/公制外螺纹24°重系列三通 METRIC FEMALE 24 °/METRIC MALE 24 °H.T. TEE	BD	69
公制外螺纹24°/公制内螺纹24°轻系列三通 METRIC MALE 24 °/METRIC FEMALE 24 °L.T. TEE	CC	70
公制外螺纹24°/公制内螺纹24°重系列三通 METRIC MALE 24 °/METRIC FEMALE 24 °H.T. TEE	CD	70
公制外螺纹24°轻系列四通 METRIC MALE 24 °L.T. CROSS	XC	71
公制外螺纹24°重系列四通 METRIC MALE 24 °H.T. CROSS	XD	71
公制外螺纹24°轻系列可调向柱端分支三通 METRIC MALE 24 °L.T.ADJUSTABLE STUD BRADCH TEE	ACHC-OG	72

目录
INDEX

类别 TYPE	代号 PART NO	页次 PAGE
公制外螺纹24°重系列可调向柱端分支三通 METRIC MALE 24 °H.T.ADJUSTABLE STUD BRADCH TEE	ADHD-OG	72
公制外螺纹24°轻系列可调向柱端主支三通 METRIC MALE 24 °L.T.ADJUSTABLE STUD RUN TEE	ACCH-OG	73
公制外螺纹24°重系列可调向柱端主支三通 METRIC MALE 24 °H.T.ADJUSTABLE STUD RUN TEE	ADDH-OG	73
公制外螺纹24°轻系列/英管可调向柱端主支三通 METRIC MALE 24 °L.T./BSP MALE ADJUSTABLE STUD RUN TEE	ACCG-OG	74
公制外螺纹24°重系列/英管可调向柱端主支三通 METRIC MALE 24 °H.T./BSP MALE ADJUSTABLE STUD RUN TEE	ADDG-OG	74
公制外螺纹24°轻系列/英管可调向柱端分支三通 METRIC MALE 24 °L.T./BSP MALE ADJUSTABLE STUD BRANCH TEE	ACGC-OG	75
公制外螺纹24°重系列/英管可调向柱端分支三通 METRIC MALE 24 °H.T./BSP MALE ADJUSTABLE STUD BRANCH TEE	ADGD-OG	75
公制24°轻系列/美制可调向柱端主支三通 METRIC MALE 24 °L.T./SAE MALE ADJUSTABLE STUD RUN TEE	ACCO-OG	76
公制24°重系列/美制可调向柱端主支三通 METRIC MALE 24 °H.T./SAE MALE ADJUSTABLE STUD RUN TEE	ADDO-OG	76
公制24°轻系列/美制可调向柱端分支三通 METRIC MALE 24 °L.T./SAE MALE ADJUSTABLE STUD BRANCH TEE	ACOC-OG	77
公制24°重系列/美制可调向柱端分支三通 METRIC MALE 24°H.T./SAE MALE ADJUSTABLE STUD BRANCH TEE	ADOD-OG	77
公制螺纹24°轻系列/英管螺纹铰接接头 METRIC MALE 24°L.T./BSP BANJO	1CL-B	78
公制螺纹24°重系列/英管螺纹铰接接头 METRIC MALE 24°H.T./BSP BANJO	1DL-B	78
公制螺纹24°轻系列/公制螺纹铰接接头 METRIC MALE 24°L.T./METRIC BANJO	1CL	79
公制螺纹24°重系列/公制螺纹铰接接头 METRIC MALE 24°H.T./METRIC BANJO	1DL	79
英制铰接螺栓 BSP BOLT	720B	80
公制铰接螺栓 METRIC BOLT	700M	80
卡套螺母轻系列 RETAINING NUTS L.T.	NL	81
卡套螺母重系列 RETAINING NUTS H.T.	NS	81
卡套轻系列 CUTTING RING L.T.	RL	82
卡套重系列 CUTTING RING H.T.	RS	82

目录
INDEX

类别 TYPE	代号 PART NO	页次 PAGE
公制外螺纹74°外锥 METRIC MALE 74 °CONE	1Q	83
公制外螺纹74°外锥堵头 METRIC MALE 74 °CONE PLUG	4Q	84
公制外螺纹74°外锥过板接头 METRIC MALE 74 °CONE BULKHEAD	6Q	85
90°公制外螺纹74°外锥过板接头 90°METRIC MALE 74 °CONE BULKHEAD	6Q9	86
公制外螺纹74°外锥/布锥管外螺纹 METRIC MALE 74 °CONE/NPT MALE	1QN	87
45°公制外螺纹74°外锥/布锥管外螺纹 45°METRIC MALE 74°CONE/NPT MALE	1QN4	88
90°公制外螺纹74°外锥/布锥管外螺纹 90°METRIC MALE 74 °CONE/NPT MALE	1QN9	89
公制外螺纹74°外锥/英锥管外螺纹 METRIC MALE 74 °CONE/BSPT MALE	1QT	90
90°公制外螺纹74°外锥/英锥管外螺纹 90°METRIC MALE 74 °CONE/BSPT MALE	1QT9	91
公制外螺纹74°外锥/英管外螺纹60 °内锥或六角端面组合垫密封 METRIC MALE 74 °CONE/BSP MALE DOUBLE FOR 60 °SEAT BONDED SEAL	1QB	92
公制74°外锥/英管外螺纹O型圈 METRIC 74°CONE/BSP MALE O-RING	1QG	93
90°公制外螺纹74°外锥/英管外螺纹O型圈可调向柱端 90°METRIC 74°CONE/BSP MALE O-RING ADJUSTABLE STUD	1QG9-OG	93
公制74°外锥/公制外螺纹 METRIC 74°CONE/METRIC MALE	1QH	94
90°公制外螺纹74°外锥/公制外螺纹可调向柱端 90°METRIC 74°CONE/METRIC MALE ADJUSTABLE STUD	1QH9-OG	94
公制外螺纹74°外锥/公制外螺纹60 °内锥或六角端面组合垫密封 METRIC MALE 74 °CONE/METRIC MALE DOUBLE FOR 60 °SEAT BONDED SEAL	1QM	95
公制外螺纹74°外锥/SAE外螺纹O型圈 METRIC MALE74 °CONE/SAE MALE O-RING	1QO	96
90°公制外螺纹74 °外锥/SAE外螺纹O型圈 90°METRIC MALE74°CONE/SAE MALE O-RING ADJUSTABLE STUD	1QO9-OG	96
90°公制外螺纹74 °外锥/公制内螺纹74 °内锥 90°METRIC MALE 74 °CONE/METRIC FEMALE 74 °SEAT	2Q9	97
公制外螺纹74°外锥三通 METRIC MALE 74 °CONE TEE	AQ	97
公制外螺纹74°外锥/可调向柱端分支三通 METRIC MALE74 °CONE/ADJUSTABLE STUD BRANCH TEE	AQHQ-OG	98
公制外螺纹74°外锥/可调向柱端主支三通 METRIC MALE74 °CONE/ADJUSTABLE STUD RUN TEE	AQQH-OG	98

目录
INDEX

类别 TYPE	代号 PART NO	页次 PAGE
日本公制外螺纹60 °外锥 JIS METRIC MALE60 ° CONE	1K	99
90°日本公制螺纹60 °外锥 90°JIS METRIC MALE60 ° CONE	2K9	99
日本公制外螺纹60 °外锥堵头 JIS METRIC MALE60 ° CONE PLUG	4K	100
日本公制内螺纹内锥60 ° JIS METRIC FEMALE 60 °SEAT PLUG	9K	100
日本公制外螺纹60 °外锥/布锥管外螺纹 JIS METRIC MALE 60 °CONE/NPT MALE	1KN	101
日本公制外螺纹60°外锥/公制外螺纹60 °密封或组合垫圈 JIS METRIC MALE60 ° CONE/METRIC MALE 60 ° CONE BONDED SEAL	1KM	101
日本公制外螺纹60°/英锥管外螺纹 JIS METRIC MALE60 °CONE/BSPT MALE	1KT	102
日本公制外螺纹60°外锥/公制外螺纹重系列 JIS METRIC MALE60 ° CONE/METRIC MALE S-SERIES	1KH	102
90°日本公制外螺纹60 °外锥/公制外螺纹可调向柱端 90°JIS METRIC MALE 60 °CONE/METRIC ALE ADJUSTABLE STUD	1KH9-OG	103
日本公制外螺纹60 °外锥/英管外螺纹O型圈 JIS METRIC MALE 60 °CONE/BSP MALE O-RING	1KG	104
90°日本公制外螺纹60 °/英管外螺纹O型圈可调向柱端 90°JIS MERIC MALE/BSP MALE O-RING ADJUSTABLE STUD	1KG9-OG	104
日本公制外螺纹60 °外锥三通 JIS METRIC MALE60 ° CONE TEE	AK	105
日本公制外螺纹60 °外锥/日本公制内螺纹60内锥分支三通 JIS METRIC MALE60 ° CONE/JIS METRIC FEMALE 60 °SEAT BRANCH TEE	BK	105
日本公制外螺纹/英管外螺纹O型圈可调向柱端主支三通 JIS METRIC MALE/BSP MALE O-RING RUN TEE ADJUSTABLE STUD	AKKG-OG	106
日本公制外螺纹60 °外锥/公制外螺纹可调向柱端主支三通 JIS METRIC MALE 60 °CONE/ADJUSTABLE STUD RUN TEE	AKKH-OG	107
日本公制外螺纹/英管外螺纹O型圈可调向柱端分支三通 JIS METRIC MALE/BSP MALE O-RING ADJUSTABLE STUD BRANCH TEE	AKGK-OG	107
日本公制外螺纹60 °外锥/公制外螺纹可调向柱端分支三通 JIS METRIC MALE 60 °CONE/ADJUSTABLE STUD BRANCHTEE	AKHK-OG	108
公制外螺纹74°内锥面 METRIC MALE 74 °CONE SEAT	1V	109
公制外螺纹74°内锥面/英锥管外螺纹 METRIC MALE 74°CONE SEAT/BSPT MALE	1VT	109
日本英管外螺纹60°外锥 JIS GAS MALE 60 °CONE	1S	110
日本英管外螺纹60°外锥堵头 JIS GAS MALE 60 °CONE PLUG	4S	110

目录
INDEX

类别 TYPE	代号 PART NO	页次 PAGE
日本英管内螺纹60 °内锥堵头 JIS GAS FEMALE 60 °SEAT PLUG	9S	111
日本英管外螺纹60 °外锥过板接头 JIS GAS MALE 60 °CONE BULKHEAD	6S	111
日本英管外螺纹60 °外锥/英锥管外螺纹 JIS GAS MALE 60 °CONE/BSPT MALE	1ST	112
45°日本英管外螺纹60 °外锥/英锥管外螺纹 45°JIS GAS MALE 60 °CONE/BSPT MALE	1ST4	113
90°日本英管外螺纹60°外锥/英锥管外螺纹 90°JIS GAS MALE 60 °CONE/BSPT MALE	1ST9	114
日本英管外螺纹60°外锥/布锥管外螺纹 JIS GAS MALE 60 °CONE/NPT MALE	1SN	115
45°日本英管外螺纹60 °外锥/布锥管外螺纹 45°JIS GAS MALE 60°CONE/NPT MALE	1SN4	116
90°日本英管外螺纹60 °外锥/布锥管外螺纹 90°JIS GAS MALE 60 °CONE/NPT MALE	1SN9	117
日本英管外螺纹60 °外锥/英管外螺纹O型圈 JIS GAS MALE 60°CONE/BSP MALE O-RING	1SG	118
90°日本英管外螺纹60 °外锥/英管外螺纹60 °O型圈可调向柱端 90°JIS GAS MALE 60 °CONE/BSP MALE O-RING ADJUSTABLE STUD	1SG9-OG	118
日本英管外螺纹60 °外锥三通 JIS GAS FEMALE 60 °SEAT TEE	AS	119
日本英管外螺纹60 °外锥/日本英管内螺纹60°内锥分支三通 JIS GAS MALE 60 °CONE/JIS GAS FEMALE 60 °SEAT BRANCH TEE	BS	119
日本英管外螺纹60 °外锥/日本英管内螺纹60 °内锥主支三通 JIS GAS MALE 60 °CONE/JIS GAS FEMALE 60 °SEAT RUN TEE	CS	120
日本英管内螺纹60 °内锥三通 JIS GAS FEMALE 60 °SEAT TEE	DS	120
日本英管外螺纹60 °外锥/英管外螺纹O型圈可调向柱端分支三通 JIS GAS MALE 60°CONE/BSP MALEO-RING ADJUSTABLE STUD BRANCH TEE	ASGS-OG	121
日本英管外螺纹60 °外锥/英管外螺纹O型圈可调向柱端主支三通 JIS GAS MALE 60°CONE/BSP MALEO-RING ADJUSTABLE STUD END RUN TEE	ASSG-OG	121
英管外螺纹60°内锥或六角端面组合垫密封 BSP MALE DOUBLE FOR 60 °SEAT BONDED SEAL	1B	122
45°英管外螺纹60°内锥 45°BSP MALE 60°SEAT	1B4	123
90◦英管外螺纹60°内锥 90°BSP MALE 60 °SEAT	1B9	124
英管外螺纹60°内锥或六角端面组合垫密封/英管内螺纹60 °外锥 BSP MALE DOUBLE FOR 60 °SEAT BONDED SEAL /BSP FEMALE 60 °CONE	2B	125
45°英管外螺纹60°内锥/英管内螺纹60 °外锥 45°BSP MALE 60°SEAT/BSP FEMALE 60 °CONE	2B4	126

目录
INDEX

类别 TYPE	代号 PART NO	页次 PAGE
90°英管外螺纹60 °内锥/英管内螺纹60 °外锥 90°BSP MALE 60°SEAT/BSP FEMALE 60 °CONE	2B9	127
英管内螺纹60°外锥 BSP FEMALE 60 °CONE	3B	128
45°英管内螺纹60°外锥 45°BSP FEMALE 60°CONE	3B4	129
90°英管内螺纹60°外锥 90°BSP FEMALE 60°CONE	3B9	129
英管外螺纹60°内锥或六角端面用组合垫密封堵头 BSP MALE DOUBLE FOR 60 °SEAT OR BONDED SEAL PLUG	4B	130
英管内螺纹60°外锥堵头 BSP FEMALE 60 °CONE PLUG	9B	130
英管外螺纹60°内锥过板接头 BSP MALE 60 °SEAT BULKHEAD	6B	131
90°英管外螺纹60°内锥过板接头 90°BSP MALE 60°SEAT BULKHEAD	6B9	131
英管螺纹锁母 BSP LOCK NUT	8B	132
英管外螺纹60°内锥或六角端面组合垫密封/英锥管外螺纹 BSP MALE DOUBLE FOR 60 °SEAT BONDED SEAL/BSPT MALE	1BT	133
45°英管外螺纹60°内锥/英锥管外螺纹 45°BSP MALE 60 °SEAT /BSPT MALE	1BT4	134
90°英管外螺纹60°内锥/英锥管外螺纹 90°BSP MALE 60°SEAT /BSPT MALE	1BT9	135
英管外螺纹60°内锥六角或端面组合垫密封/布锥管外螺纹 BSP MALE DOUBLE FOR 60 °SEAT BONDED SEAL/NPT MALE	1BN	136
45°英管外螺纹60°内锥/布锥管外螺纹 45°BSP MALE 60°SEAT /NPT MALE	1BN4	137
90°英管外螺纹60°内锥/布锥管外螺纹 90°BSP MALE 60 °SEAT /NPT MALE	1BN9	138
英管外螺纹60°内锥或六角端面组合垫密封/英锥管外螺纹O 型圈 BSP MALE DOUBLE FOR 60 °SEAT BONDED SEAL/BSPT MALE O-RING	1BG	139
45°英管外螺纹60°内锥/英管外螺纹O型圈可调向柱端 45°BSP MALE 60°SEAT/BSP MALE O-RING ADJUSTABLE STUD END	1BG4-OG	140
90°英管外螺纹60°内锥/英管外螺纹O型圈可调向柱端 90°BSP MALE 60 °SEAT/BSP MALE O-RING ADJUSTABLE STUD END	1BG9-OG	141
英管外螺纹60°内锥或六角端面组合垫密封/公制外螺纹轻系列 BSP MALE DOUBLE FOR 60 °SEAT BONDED SEAL/METRIC MALE L-SERIES	1BH	142
45°英管外螺纹60°内锥/公制外螺纹轻系列 45°BSP MALE 60 °SEAT/METRIC MALE 0-RING	1BH4-OG	143
90°英管外螺纹60°内锥/公制外螺纹轻系列 90°BSP MALE 60°SEAT/METRIC MALE 0-RING	1BH9-OG	144

目录
INDEX

类别 TYPE	代号 PART NO	页次 PAGE
英管外螺纹60°内锥或六角端面组合垫密封/美制JIC 外螺纹74°外锥 BSP MALE DOUBLE FOR 60 °SEATBONDED SEAL/JIC MALE 74 °CONE	1BJ	145
英管外螺纹60°内锥或六角端面组合垫密封/美制JIC 外螺纹74°外锥 BSP MALE DOUBLE FOR 60 °SEATBONDED SEAL/JIC MALE 74 °CONE	1BJ	146
45°英管外螺纹60°内锥/美制JIC外螺纹74 °外锥 45°BSP MALE 60°SEAT/JIC MALE 74 °CONE	1BJ4	147
90°英管外螺纹60°内锥/美制JIC外螺纹74 °外锥 90°BSP MALE 60 °SEAT/JIC MALE 74 °CONE	1BJ9	148
英管外螺纹60°内锥或六角端面组合垫密封/公制外螺纹60 ° 内锥或六角端面组合垫密封 BSP MALE 60 °SEAT DOUBLE 60°SEAT BONDED SEAL /METRIC MALE DOUBLE 60 °SEAT BONDED SEAL	1BM	149
英管外螺纹60°内锥或六角端面组合垫密封/美制SAE 外螺纹带O型圈轻系列 BSP MALE 60 °SEAT BONDED SEAL/SAE O-RING BOSS L-SERIES	1BO	150
英管外螺纹60°内锥或六角端面组合垫密封/焊接管 BSP MALE 60 °SEAT BONDED SEAL/BUTT-WELD TUBE	1BW	151
焊接管/英管内螺纹60 °外锥 BUTT-WELD TUBE/BSP FEMALE 60 °CONE	2WB	151
英管外螺纹60°内锥或六角端面组合垫密封/英管外螺纹胶垫密封 BSP MALE 60 °SEAT BONDED SEAL/BSP MALE CAPTIVE SEAL	1B-WD	152
英管外螺纹60°内锥或六角端面组合垫密封/美制JIC内螺纹74 °内锥 BSP MALE DOUBLE FOR 60 °SEATBONDED SEAL/JIC FEMALE 74 °SEAT	2BJ	153
英管外螺纹胶垫密封/美制JIC内螺纹74 °内锥 BSP MALE CAPTIVE SEAL/JIC FEMALE 74 °SEAT	2BJ-WD	154
英锥管外螺纹/英管内螺纹60 °外锥 BSPT MALE/BSP FEMALE 60 °CONE	2TB	155
45°英锥管外螺纹/英管内螺纹60 °外锥 45°BSPT MALE/BSP FEMALE 60 °CONE	2TB4	156
90°英锥管外螺纹/英管内螺纹60 外锥 90°BSPT MALE/BSP FEMALE 60 °CONE	2TB9	156
布锥管外螺纹/英管内螺纹60 °外锥 NPT MALE/BSP FEMALE 60 °CONE	2NB	157
45°布锥管外螺纹/英管内螺纹60 °外锥 45°NPT MALE/BSP FEMALE 60 °CONE	2NB4	158
90°布锥管外螺纹/英管内螺纹60 °外锥 90°NPT MALE/BSP FEMALE 60 °CONE	2NB9	159
英管外螺纹胶垫密封内六角堵头 BSP MALE CAPTIVE SEAL HOLLOW HEX PLUG	4BN-WD	160
英管外螺纹胶垫密封堵头 BSP MALE CAPTIVE SEAL PLUG	4B-WD	160
英管外螺纹60°内锥或六角端面组合垫密封/英管内螺纹 BSP MALE DOUBLE FOR 60 °SEATBONDED SEAL/BSP FEMALE	5B	161

目录
INDEX

类别 TYPE	代号 PART NO	页次 PAGE
90°英管外螺纹60 °内锥/英管内螺纹 90°BSP MALE 60°SEAT/BSP FEMALE	5B9	162
英管外螺纹60°内锥或六角端面组合垫密封/美制布锥管内螺纹 BSP MALE DOUBLE FOR 60 °EATBONEDE SEAL/NPT FEMALE	5BN	163
英管外螺纹60°内锥或六角端面组合垫密封/英锥管内螺纹 BSP MALE DOUBLE FOR 60 °EATBONEDE SEAL/BSPT FEMALE	5BT	163
英管外螺纹胶垫密封/英管内螺纹 BSP MALE CAPTIVE SEAL/BSP FEMALE	5B-WD	164
英管外螺纹O型圈/英管内螺纹 BSP MALE O-RING/BSP FEMALE	5GB	165
英锥管内螺纹/英管内螺纹60 °外锥 BSPT FEMALE/BSP FEMALE 60 °CONE	7TB	165
英管内螺纹 BSP FEMALE	7B	166
90°英管内螺纹 90°BSP FEMALE	7B9	167
英管内螺纹三通 BSP FEMALE TEE	GB	167
英管外螺纹60°内锥三通 BSP MALE 60 °SEAT TEE	AB	168
英管外螺纹60°内锥/英管内螺纹外锥分支三通 BSP MALE 60 °SEAT/BSP FEMALE 60 °CONE BRANCH TEE	BB	168
英管外螺纹60°内锥/英管内螺纹外锥主支三通 BSP MALE 60 °SEAT/BSP FEMALE 60 °CONE RUN TEE	CB	169
英管内螺纹外锥三通 BSP FEMALE 60 °CONE TEE	DB	169
英管内螺纹60°外锥/英管外螺纹60 °内锥分支三通 BSP FEMALE 60 °CONE/BSP MALE 60 ° BRANCH TEE	EB	170
英管内螺纹60°外锥/英管外螺纹60 °内锥分支三通 BSP FEMALE 60°CONE/BSP MALE 60 °BRANCH TEE	FB	170
英管外螺纹60 °内锥/英管外螺纹O型圈可调向柱端主支三通 BSP MALE 60°SEAT/BSP MALEO-RING ADJUSTABLE STUD END RUN TEE	ABBG-OG	171
英管外螺纹60 °内锥/英管外螺纹O型圈可调向柱端分支三通 BSP MALE 60°SEAT/BSP MALEO-RINGADJUSTABLE STUD END BRANCH TEE	ABGB-OG	171
英锥管外螺纹 BSPT MALE	1T	172
45°英锥管外螺纹 45°BSPT MALE	1T4	173
90°英锥管外螺纹 90°BSPT MALE	1T9	173
英锥管外螺纹堵头 BSPT MALE PLUG	4T	174

目录
INDEX

类别 TYPE	代号 PART NO	页次 PAGE
英锥管外螺纹内六角堵头 BSPT MALE HOLLOW HEX PLUG	4TN	174
英锥管外螺纹/英锥管内螺纹 BSPT MALE/BSPT FEMALE	5T	175
90°英锥管外螺纹/英锥管内螺纹 90°BSPT MALE/BSPT FEMALE	5T9	176
英锥管内螺纹 BSPT FEMALE	7T	177
90°英锥管内螺纹 90°BSPT FEMALE	7T9	178
英锥管内螺纹三通 BSPT FEMALE TEE	GT	178
英锥管内螺纹四通 BSPT FEMALE CROSS	ZT	179
英管外螺纹O型圈/英锥管内螺纹 BSP MALE O-RING/BSPT FEMALE	5GT	179
美制布锥管外螺纹 NPT MALE	1N	180
45°美制布锥管外螺纹 45°NPT MALE	1N4	181
90°美制布锥管外螺纹 90°NPT MALE	1N9	181
美制布锥管外螺纹内六角堵头 NPT MALE HOLLOW HEX PLUG	4NN	182
美制布锥管外螺纹堵头 NPT MALE PLUG	4N	182
美制布锥管外螺纹/布锥管内螺纹 NPT MALE/NPT FEMALE	5N	183
45°美制布锥管外螺纹/布锥管内螺纹 45°NPT MALE/NPT FEMALE	5N4	184
90°美制布锥管外螺纹/布锥管内螺纹 90°NPT MALE/NPT FEMALE	5N9	184
美制布锥管内螺纹 NPT FEMALE	7N	185
90°美制布锥管内螺纹 90°NPT FEMALE	7N9	186
美制布锥管内螺纹堵头 NPT FEMALE PLUG	9N-CAP	186
美制SAE外螺纹带O型圈/美制布锥管外螺纹 NPT MALE/SAE O-RING BOSS	1NO	187
布锥管外螺纹/美制NPSM内螺纹60 °外锥 NPT MALE/NPSM FEMALE 60 °CONE	2NU	188

目录
INDEX

类别 TYPE	代号 PART NO	页次 PAGE
45°布锥管外螺纹/美制NPSM内螺纹60 °外锥 45°NPT MALE/NPSM FEMALE 60 °CONE	2NU4	189
90°布锥管外螺纹/美制NPSM内螺纹60 °外锥 90°NPT MALE/NPSM FEMALE 60 °CONE	2NU9	190
美制外螺纹O型圈/美制布锥管内螺纹 BSP MALE O-RING/NPT FEMALE	5GN	191
公制外螺纹轻系列/美制布锥管内螺纹 METRIC MALE L-SERIES/NPT FEMALE	5HN	192
公制外螺纹组合垫圈/美制布锥管内螺纹 METRIC MALE WITH BONDED SEAL/NPT FEMALE	5MN	192
美制布锥管外螺纹/美制SAE内螺纹 NPT MALE/SAE FEMALE	5NO	193
美制SAE外螺纹O型圈轻系列/美制布锥管内螺纹 SAE O-RING BOSS L-SERIES/NPT FEMALE	5ON	194
英锥管外螺纹/美制布锥管内螺纹 BSPT MALE/NPT FEMALE	5TN	195
美制布锥管内螺纹四通 NPT FEMALE CROSS	ZN	195
布锥管内螺纹/美制NPSM内螺纹60 °外锥 NPT FEMALE/NPSM FEMALE 60 °CONE	7NU	196
美制布锥管外螺纹三通 NPT MALE TEE	AN	197
布锥管内螺纹三通 NPT FEMALE TEE	GN	197
美制布锥管内螺纹/布锥管外螺纹分支三通 NPT FEMALE/NPT MALE BRANCH TEE	JN	198
美制布锥管内螺纹/布锥管外螺纹主支三通 NPT FEMALE/NPT MALE RUN TEE	HN	198
美制JIC外螺纹74°外锥 JIC MALE 74 ° CONE	1J	199
45°美制JIC外螺纹74°外锥 45°JIC MALE 74 ° CONE	1J4	200
90°日制JIC外螺纹74 °外锥 90°JIC MALE 74° CONE	1J9	200
90°日制JIC外螺纹74 °外锥 90°JIC MALE 74° CONE	1J9	200
美制JIC外螺纹74°外锥/JIC内螺纹74 °内锥 JIC MALE 74 °CONE/JIC FEMALE 74 °SEAT	2J	201
45°美制JIC外螺纹74 °外锥/JIC内螺纹74 °内锥 45°JIC MALE 74 °CONE/JIC FEMALE 74 °SEAT	2J4	202
90°日制JIC外螺纹74 °外锥/JIC内螺纹74 °内锥 90°JIC MALE 74 °CONE/JIC FEMALE 74 °SEAT	2J9	203

目录
INDEX

类别 TYPE	代号 PART NO	页次 PAGE
美制JIC内螺纹74°内锥 JIC FEMALE 74 °SEAT	3J	204
45°美制JIC内螺纹74°内锥 45°JIC FEMALE 74°SEAT	3J4	204
90°美制JIC内螺纹74 °内锥 90°JIC FEMALE 74°SEAT	3J9	205
美制JIC外螺纹74 °外锥堵头 JIC MALE 74°CONE PLUG	4J	205
美制JIC外螺纹/美制JIC内螺纹 JIC MALE/JIC FEMALE	5J	206
美制JIC外螺纹74 °外锥过板接头 JIC MALE 74 °CONE BULKHEAD	6J	207
45°美制JIC外螺纹74°外锥过板接头 45°JIC MALE 74 °CONE BULKHEAD	6J4	207
90°美制JIC外螺纹74°外锥过板接头 90°JIC MALE 74°CONE BULKHEAD	6J9	208
美制JIC锁母 JIC LOCK NUT	8J	208
美制JIC内螺纹74°内锥堵头 JIC FEMALE 74 °SEAT PLUG	9J	209
JIC74°内螺纹堵头 JIC 74°FEMALE PLUG	9J-CAP	209
JIC外螺纹74°外锥/英锥管外螺纹 JIC MALE 74 °CONE/BSPT MALE	1JT	210
45°JIC外螺纹74°外锥/英锥管外螺纹 45°JIC MALE 74 °CONE/BSPT MALE	1JT4	211
90°JIC外螺纹74°外锥/英锥管外螺纹 90°JIC MALE 74°CONE/BSPT MALE	1JT9	212
JIC外螺纹74°外锥/布锥管外螺纹 JIC MALE 74 °CONE/NPT MALE	1JN	213
45°JIC外螺纹74°外锥/布锥管外螺纹 45°JIC MALE 74 °CONE/NPT MALE	1JN4	214
90°JIC外螺纹74°外锥/布锥管外螺纹 90°JIC MALE 74°CONE/NPT MALE	1JN9	215
90°JIC外螺纹74°外锥/加长布锥管外螺纹 90°JIC MALE 74°CONE/LONG NPT MALE	1JN9-L	216
90°JIC外螺纹74°外锥/特长布锥管外螺纹 90°JIC MALE 74°CONE/LONGGER NPT MALE	1JN9-LL	217
美制JIC外螺纹74°外锥/英管内螺纹60 °外锥 JIC MALE 74 °CONE/BSP FEMALE 60 °CONE	2JB	218
美制JIC外螺纹74°外锥/英管外螺纹O型圈 JIC MALE 74 °CONE/BSP MALE O-RING	1JG	219

目录
INDEX

类别 TYPE	代号 PART NO	页次 PAGE
45°美制JIC外螺纹74°外锥/英管外螺纹O型圈 45°JIC MALE 74 °CONE/BSP MALE O-RING	1JG4-OG	220
90°美制JIC外螺纹74°外锥/英管外螺纹O型圈 90°JIC MALE 74°CONE/BSP MALE O-RING	1JG9-OG	221
美制JIC外螺纹74°外锥/ORFS外螺纹 JIC MALE 74 °CONE/ORFS MALE	1JF	222
JIC外螺纹74°外锥/公制外螺纹O型圈密封 JIC MALE 74 °CONE/ METRIC MALE END O-RING	1JH	223
45°美制JIC外螺纹74°外锥/公制外螺纹可调向柱端 45°JIC MALE 74 °CONE/METRIC MALEADJUSTABLE STUD END	1JH4-OG	224
90°美制JIC外螺纹74°外锥/公制外螺纹可调向柱端 90°JIC MALE 74°CONE/METRIC MALEADJUSTABLE STUD END	1JH9-OG	225
JIC外螺纹74°外锥/公制外螺纹60 °内锥或六角端面组合垫密封 JIC MALE 74 °CONE/METRIC MALE DOUBLEUSE FOR 60 °SEAT OR BONDED SEAL	1JM	226
JIC外螺纹74°外锥/公制外螺纹胶垫密封 JIC MALE 74 °CONE/METRIC MALE CAPTIVE SEAL	1JM-WD	227
美制JIC外螺纹74°外锥/SAE外螺纹带O型圈 JIC MALE 74 °CONE/SAE O-RING BOSS	1JO	228
美制JIC外螺纹74°外锥/SAE外螺纹带O型圈 JIC MALE 74 °CONE/SAE O-RING BOSS	1JO	229
加长美制JIC外螺纹74 °外锥/SAE外螺纹带O型圈 LONG JIC MALE 74 °CONE/SAE O-RING BOSS	1JO-L	229
45°JIC外螺纹74°外锥/SAE外螺纹带O型圈 45°JIC MALE 74 °CONE/SAE O-RING BOSS	1JO4-OG	230
90°JIC外螺纹74°外锥/SAE外螺纹带O型圈 90°JIC MALE 74 °CONE/SAE O-RING BOSS	1JO9-OG	231
90°美制JIC外螺纹74 °外锥/加长SAE外螺纹带O型圈 90°JIC MALE 74 °CONE/LONG SAE O-RING BOSS	1JO9-OG/L	232
英管外螺纹胶垫密封/JIC外螺纹74 °外锥 BSP MALE CAPTIVE SEAL/JIC MALE 74 °CONE	1BJ-WD	233
英锥管外螺纹/JIC内螺纹74 °内锥 BSPT MALE/JIC FEMALE 74 °SEAT	2TJ	234
布锥管外螺纹/JIC内螺纹74 °内锥 NPT MALE/JIC FEMALE 74 °SEAT	2NJ	235
英管外螺纹O型圈/JIC内螺纹74 °锥面 BSP MALE O-RING/JIC FEMALE 74 °CONE	2GJ	236
美制SAE外螺纹带O型圈/JIC内螺纹74 °内锥 SAE O-RING BOSS/JIC FEMALE 74 °SEAT	2OJ	237
焊接管/美制JIC内螺纹74 °内锥 BUTT-WELD TUBE/JIC FEMALE 74 °SEAT	2WJ	237
美制JIC外螺纹74 °外锥/英管内螺纹 JIC MALE 74°CONE/BSP FEMALE	5JB	238

目录
INDEX

类别 TYPE	代号 PART NO	页次 PAGE
美制JIC外螺纹74°外锥/布锥管内螺纹 JIC MALE 74 °CONE/BSPT FEMALE	5JT	239
美制JIC外螺纹74°外锥/布锥管内螺纹 JIC MALE 74 °CONE/NPT FEMALE	5JN	240
90°美制JIC外螺纹74°外锥/布锥管内螺纹 90°JIC MALE 74°CONE/NPT FEMALE	5JN9	241
美制NPT外螺纹/美制JIC外螺纹外锥过板接头 NPT MALE/JIC MALE 74 °CONE BULKHEAD	6NJ	242
布锥管内螺纹/JIC内螺纹74 °内锥 NPT FEMALE/JIC FEMALE 74 °SEAT	7NJ	242
美制JIC外螺纹74°外锥三通 JIC MALE 74 °CONE TEE	AJ	243
美制JIC外螺纹74°外锥/美制JIC内螺纹74 °内锥分支三通 JIC MALE 74 ° CONE/JIC FEMALE BRANCH TEE	BJ	243
美制JIC外螺纹74°外锥/美制JIC内螺纹74 °内锥主支三通 JIC MALE 74 ° CONE/JIC FEMALE 74 °SEAT RUN TEE	CJ	244
美制JIC内螺纹74°内锥三通 JIC FEMALE 74 °SEAT TEE	DJ	244
美制JIC内螺纹74°内锥/美制JIC外螺纹74 °外锥分支三通 JIC FEMALE 74 ° SEAT/JIC MALE 74 °CONE BRANCH TEE	EJ	245
美制JIC内螺纹74 °内锥/美制JIC外螺纹74 °外锥分支三通 JIC FEMALE 74 ° SEAT/JIC MALE 74 °CONE BRANCH TEE	FJ	245
美制JIC外螺纹74 °外锥/布锥管外螺纹分支三通 JIC MALE 74°CONE/NPT MALE BRANCH TEE	AJNJ	246
美制JIC外螺纹74 °外锥/布锥管外螺纹主支三通 JIC MALE 74 °CONE/NPT MALE RUN TEE	AJJN	247
美制JIC外螺纹74°外锥过板接头主支三通 JIC MALE 74 °CONE BULKHEAD RUN TEE	AJJ6J	248
美制JIC外螺纹74°外锥过板接头分支三通 JIC MALE 74 °CONE BULKHEAD BRANCH TEE	AJ6JJ	248
美制JIC外螺纹74°外锥/布锥管内螺纹分支三通 JIC MALE 74 °CONE/NPT FEMALE BRANCH TEE	KJNJ	249
美制JIC外螺纹74°外锥/布锥管内螺纹主支三通 JIC MALE 74 °CONE/NPT FEMALE RUN TEE	LJJN	250
美制JIC外螺纹74°外锥/SAE外螺纹带O型圈分支三通 JIC MALE 74 °CONE/SAE O-RING BOSS BRANCH TEE	AJOJ-OG	251
美制JIC外螺纹74°外锥/SAE外螺纹带O型圈主支三通 JIC MALE 74 °CONE/SAE O-RING BOSS RUN TEE	AJJO-OG	252
JIC外螺纹74 °外锥/英管外螺纹O型圈分支三通 JIC MALE 74 °CONE/BSP MALE O-RING BRANCH TEE	AJGJ-OG	253
JIC外螺纹74°外锥/英管外螺纹O型圈主支三通 JIC MALE 74 °CONE/BSP MALE O-RING RUN TEE	AJJG-OG	253

目录
INDEX

类别 TYPE	代号 PART NO	页次 PAGE
美制JIC外螺纹74°外锥/公制外螺纹可调向柱端主支三通 JIC MALE 74 °CONE/METRIC MALE ADJUSTABLE STUD END	AJJH-OG	254
JIC公制管衬套 JIC METRIC SLEEVE	NB500	255
JIC英制管衬套 JIC INCH SLEEVE	NB300	256
美制JIC扩口管接头螺母 JIC FLARE TUBE END NUT	00TSUM-NB	256
美制ORFS外螺纹O型圈平面密封 ORFS MALE O-RING	1F	257
45°美制ORFS外螺纹O型圈平面密封 45°ORFS MALE O-RING	1F4	258
90°美制ORFS外螺纹O型圈平面密封 90°ORFS MALE O-RING	1F9	258
美制ORFS外螺纹O型圈平面密封/ORFS内螺纹 ORFS MALE O-RING/ORFS FEMALE	2F	259
45°美制ORFS外螺纹O型圈平面密封/ORFS内螺纹 45°ORFS MALE O-RING/ORFS FEMALE	2F4	260
90°美制ORFS外螺纹O型圈平面密封/ORFS内螺纹 90°ORFS MALE O-RING/ORFS FEMALE	2F9	260
美制ORFS内螺纹 ORFS FEMALE	3F	261
美制ORFS外螺纹O型圈平面密封堵头 ORFS MALE O-RING PLUG	4F	261
美制ORFS外螺纹O型圈平面密封过板接头 ORFS MALE O-RING BULKHEAD	6F	262
45°美制ORFS外螺纹O型圈平面密封过板接头 45°ORFS MALE O-RING BULKHEAD	6F4	262
90°美制ORFS外螺纹O型圈平面密封过板接头 90°ORFS MALE O-RING BULKHEAD	6F9	263
美制ORFS锁母 ORFS LOCK NUT	8F	264
美制ORFS内螺纹堵头 ORFS FEMALE PLUG	9F	264
美制ORFS外螺纹O型圈平面密封/布锥管外螺纹 ORFS MALE O-RING/NPT MALE	1FN	265
45°美制ORFS外螺纹O型圈平面密封/布锥管外螺纹 45°ORFS MALE O-RING/NPT MALE	1FN4	266
90°美制ORFS外螺纹O型圈平面密封/布锥管外螺纹 90°ORFS MALE O-RING/NPT MALE	1FN9	267
美制ORFS外螺纹O型圈平面密封/公制外螺纹 ORFS MALE O-RING/METRIC MALE O-RING	1FH	268

目录
INDEX

类别 TYPE	代号 PART NO	页次 PAGE
45°美制ORFS外螺纹O型圈平面密封/公制外螺纹可调向柱端 45°ORFS MALE O-RING/ METRIC MALE ADJUSTABLE STUD END	1FH4-OG	269
90°美制ORFS外螺纹O型圈平面密封/公制外螺纹可调向柱端 90°ORFS MALE O-RING/ METRIC MALE ADJUSTABLE STUD END	1FH9-OG	269
美制ORFS外螺纹O型圈平面密封/美制外螺纹带O型圈重系列 ORFS MALE O-RING/SAE O-RING BOSS S-SERIES	1FO	270
45°美制ORFS外螺纹O型圈平面密封/美制外螺纹带O型圈重系列 45°ORFS MALE O-RING/SAE O-RING BOSS S-SERIES	1FO4-OG	271
90°美制ORFS外螺纹O型圈平面密封/美制外螺纹带O型圈重系列 90°ORFS MALE O-RING/SAE O-RING BOSS S-SERIES	1FO9-OG	272
美制ORFS外螺纹O型圈平面密封/英管外螺纹O型圈 ORFS MALE O-RING/BSP MALE O-RING	1FG	273
45°美制ORFS外螺纹O型圈平面密封/英管外螺纹O型圈 45°ORFS MALE O-RING/BSP MALE O-RING	1FG4-OG	274
90°美制ORFS外螺纹O型圈平面密封/英管外螺纹O型圈 90°ORFS MALE O-RING/BSP MALE O-RING	1FG9-OG	275
美制SAE外螺纹O型圈重系列/ORFS内螺纹 SAE O-RING BOSS S-SERIES/ORFS FEMALE	2OF	276
美制ORFS外螺纹O型圈平面密封过板接头主支三通 ORFS MALE O-RING BULKHEAD RUN TEE	AFF6F	277
美制ORFS外螺纹O型圈平面密封过板接头分支三通 ORFS MALE O-RING BULKHEAD BRANCH TEE	AF6FF	277
美制ORFS外螺纹O型圈平面密封/英管外螺纹O型圈主支三通 ORFS MALE O-RING/BSP MALE O-RING RUN TEE	AFFG-OG	278
美制ORFS外螺纹O型圈平面密封/英管外螺纹O型圈分支三通 ORFS MALE O-RING/BSP MALE O-RING RUN TEE	AFGF-OG	278
美制ORFS外螺纹O型圈平面密封/美制SAE外螺纹带O型圈分支三通 ORFS MALE O-RING/SAE O-RING BOSS BRANCH TEE	AFOF-OG	279
美制ORFS外螺纹O型圈平面密封/美制SAE外螺纹带O型圈主支三通 ORFS MALE O-RING/SAE O-RING BOSS RUN TEE	AFFO-OG	280
美制ORFS外螺纹O型圈平面密封/公制外螺纹可调向柱端主支三通 ORFS MALE O-RING/ METRIC MALE ADJUSTABLE STUD END RUN TEE	AFFH-OG	281
美制ORFS外螺纹O型圈平面密封/公制外螺纹可调向柱端分支三通 ORFS MALE O-RING/ METRIC MALE ADJUSTABLE STUD END BRANCH TEE	AFHF-OG	281
英管外螺纹O型圈 BSP MALE O-RING	1G	282
英管外螺纹O型圈堵头 BSP MALE O-RING PLUG	4G	282
英管外螺纹O型圈/英锥管外螺纹 BSP MALE O-RING/BSPT MALE	1GT	283
公制外螺纹轻系列内六角堵头 METRIC MALE L-SERIES HOLLOW HEX PLUG	4HN	283

目录
INDEX

类别 TYPE	代号 PART NO	页次 PAGE
公制外螺纹轻系列 METRIC MALE L-SERIES	1H	284
公制外螺纹轻系列堵头 METRIC MALE L-SERIES PLUG	4H	284
公制外螺纹60°内锥或六角端面组合垫密封 METRIC MALE DOUBLE FOR 60 °CONE SEAT BONDED SEAL	1M	285
公制外螺纹60°内锥或六角端面组合垫密封堵头 METRIC MALE DOUBLE FOR 60 °CONE SEAT BONDED SEAL PLUG	4M	286
公制外螺纹胶垫密封内六角堵头 METRIC MALE CAPTIVE SEAL HOLLOW HEX PLUG	4MN-WD	286
美制SAE外螺纹带O型圈 SAE O-RING BOSS	1O	287
美制SAE外螺纹带O型圈/英锥管外螺纹 SAE O-RING BOSS/BSPT MALE	1OT	287
SAE外螺纹带O型圈/美制NPSM内螺纹60 °外锥 SAE O-RING BOSS /NPSM FEMALE 60 °CONE	2OU	288
美制SAE外螺纹带O型圈堵头 SAE O-RING BOSS PLUG	4O	289
美制SAE外螺纹带O型圈内六角堵头 SAE O-RING BOSS HOLLOW HEX PLUG	4ON	289
美制SAE外螺纹90°外锥 SAE MALE 90 °CONE	1P	290
美制SAE外螺纹90°外锥堵头 SAE MALE 90 °CONE PLUG	4P	290
轻系列对开法兰夹 L-SERIES SPLIT FLANGE CLAMPS	FL	291
重系列对开法兰夹 S-SERIES SPLIT FLANGE CLAMPS	FS	291
轻系列整体法兰夹 L-SERIES WHOLE FLANGE CLAMPS	FL-W	292
重系列整体法兰夹 S-SERIES WHOLE FLANGE CLAMPS	FS-W	292
公制螺纹卡套式/轻系列法兰 METRIC MALE BITE TYPE/L-SERIES FLANGE	1CFL	293
公制螺纹卡套式/轻系列法兰 METRIC MALE BITE TYPE/L-SERIES FLANGE	1DFL	293
90°公制螺纹卡套式/轻系列法兰 90°METRIC MALE BITE TYPE/L-SERIES FLANGE	1CFL9	294
90°公制螺纹卡套式/轻系列法兰 90°METRIC MALE BITE TYPE/L-SERIES FLANGE	1DFL9	294
公制螺纹卡套式/重系列法兰 METRIC MALE BITE TYPE/S-SERIES FLANGE	1DFS	295

目录
INDEX

类别 TYPE	代号 PART NO	页次 PAGE
90°公制螺纹卡套式/重系列法兰 90°METRIC MALE BITE TYPE/S-SERIES FLANGE	1DFS9	295
美制ORFS外螺纹O型圈平面密封/轻系列法兰 ORFS MALE O-RING/L-SERIES FLANGE	1FFL	296
90°美制ORFS外螺纹O型圈平面密封/轻系列法兰 90°ORFS MALE O-RING/L-SERIES FLANGE	1FFL9	296
美制ORFS外螺纹O型圈平面密封/重系列法兰 ORFS MALE O-RING/S-SERIES FLANGE	1FFS	296
90°美制ORFS外螺纹O型圈平面密封/重系列法兰 90°ORFS MALE O-RING/S-SERIES FLANGE	1FFS9	297
美制JIC外螺纹74°外锥/轻系列法兰 JIC MALE 74 °CONE/L-SERIES FLANGE	1JFL	297
45°美制JIC外螺纹74 °外锥/轻系列法兰 45°JIC MALE 74 °CONE/L-SERIES FLANGE	1JFL4	298
90°美制JIC外螺纹74 °外锥/轻系列法兰 90°JIC MALE 74°CONE/L-SERIES FLANGE	1JFL9	299
美制JIC外螺纹74°外锥/重系列法兰 JIC MALE 74 °CONE/S-ERIES FLANGE	1JFS	300
45°美制JIC外螺纹74 °外锥/重系列法兰 45°JIC MALE 74 °CONE/S-ERIES FLANGE	1JFS4	301
90°美制JIC外螺纹74 °外锥/重系列法兰 90°JIC MALE 74 °CONE/S-ERIES FLANGE	1JFS9	302
轻系列法兰/焊接管 L-SERIES FLANGE/BUTT-WELD TUBE	1FLW	303
重系列法兰/焊接管 S-SERIES FLANGE/BUTT-WELD TUBE	1FSW	304
轻系列法兰堵头 L-SERIES FLANGE PLUG	4FL	305
重系列法兰堵头 S-SERIES FLANGE PLUG	4FS	305
轻系列平面法兰堵头 L-SERIES FLANGE PLUG	4FL-M	306
重系列平面法兰堵头 S-SERIES FLANGE PLUG	4FS-M	306

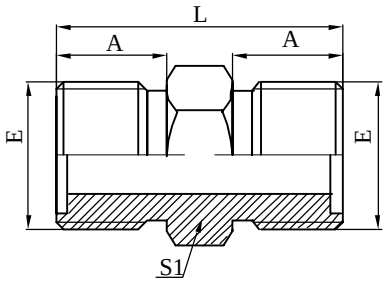

1E

公制外螺纹O型圈平面密封
METRIC MALE O-RING

代号 PART NO.	螺纹 THREADE					尺 寸 DIMENSIONS				
	E					A		S1		L
1E-12	M12x1.5					11		14		28
1E-14	M14x1.5					11		17		28
1E-16	M16x1.5					11		17		28
1E-18	M18x1.5					11		19		28
1E-22	M22x1.5					12		24		32
1E-27	M27x1.5					13		30		35
1E-30	M30x1.5					14		32		38
1E-36	M36x2					16		36		43
1E-39	M39x2					18		41		48
1E-45	M45x2					20		46		53
1E-52	M52x2					22		55		59
1E-60	M60x2					24		65		65
1E-64	M64x2					28		70		73

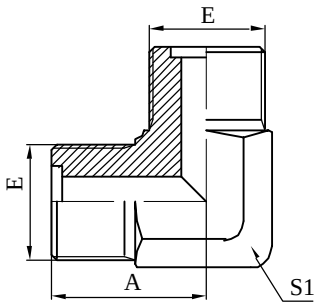

1E9

90°公制外螺纹O型圈平面密封
90°METRIC MALE O-RING

代号 PART NO.	螺纹 THREADE					尺 寸 DIMENSIONS				
	E					A		S1		
1E9-12	M12x1.5					25		11		
1E9-14	M14x1.5					27		14		
1E9-16	M16x1.5					29		17		
1E9-18	M18x1.5					32		19		
1E9-22	M22x1.5					37		22		
1E9-27	M27x1.5					41		27		
1E9-30	M30x1.5					49		33		
1E9-36	M36x2					47		33		
1E9-39	M39x2					57		44		
1E9-45	M45x2					55		44		
1E9-52	M52x2					59		55		

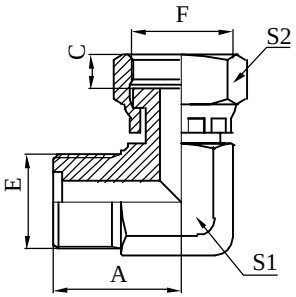

2E9

90 °公制螺纹O型圈平面密封
90 °METRIC MALE O-RING

代号 PART NO.	螺纹 THREADE					尺 寸 DIMENSIONS				
	E	F				A	C	S1	S2	
2E9-14	M14x1.5	M14x1.5				29	9	14	19	
2E9-16	M16x1.5	M16x1.5				30	9.5	17	22	
2E9-18	M18x1.5	M18x1.5				33	9.5	19	24	
2E9-22	M22x1.5	M22x1.5				37	10	22	27	
2E9-27	M27x1.5	M27x1.5				41	10.5	27	32	
2E9-30	M30x1.5	M30x1.5				49	11.5	33	36	
2E9-36	M36x2	M36x2				47	13.5	33	41	
2E9-39	M39x2	M39x2				57	13.5	44	46	
2E9-45	M45x2	M45x2				55	15.5	44	55	
2E9-52	M52x2	M52x2				59	17.5	55	60	

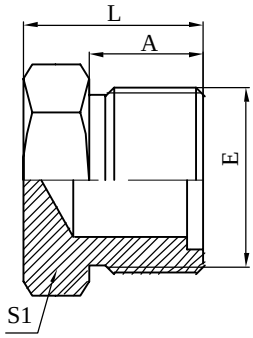

4E

公制外螺纹O型圈平面密封堵头
METRIC MALE O-RING PLUG

代号 PART NO.	螺纹 THREADE					尺 寸 DIMENSIONS				
	E					A		S1		L
4E-12	M12x1.5					11		14		17
4E-14	M14x1.5					11		17		17
4E-16	M16x1.5					11		17		17
4E-18	M18x1.5					11		19		17
4E-22	M22x1.5					12		24		20
4E-27	M27x1.5					13		30		22
4E-30	M30x1.5					14		32		24
4E-36	M36x2					16		41		28
4E-39	M39x2					18		41		30
4E-45	M45x2					20		46		33
4E-52	M52x2					22		55		37
4E-60	M60x2					24		65		41
4E-64	M64x2					28		70		45

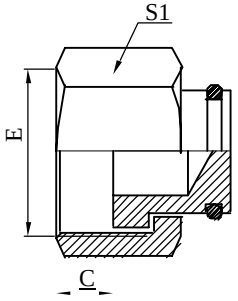

9E

公制内螺纹平面堵头
METRIC FEMALE FLAT FACE PLUG

代号 PART NO.	螺纹 THREADE					尺 寸 DIMENSIONS				
	E					C		S1		
9E-12	M12x1.5					8		14		
9E-14	M14x1.5					8		17		
9E-16	M16x1.5					8		19		
9E-18	M18x1.5					8.5		22		
9E-22	M22x1.5					10		27		
9E-27	M27x1.5					10.5		32		
9E-30	M30x1.5					11		36		
9E-36	M36x2					13		41		
9E-39	M39x2					13		46		
9E-45	M45x2					15		55		
9E-52	M52x2					17		60		

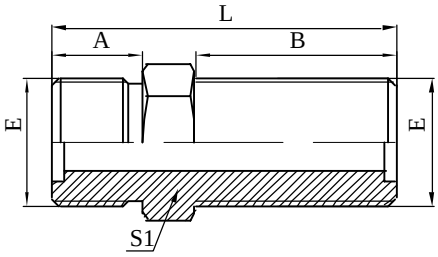

6E

公制外螺纹O型圈平面密封过板接头
METRIC MALE O-RING BULKHEAD

代号 PART NO.	螺纹 THREADE					尺 寸 DIMENSIONS				
	E					A	B	S1		L
6E-12	M12x1.5					11	31.5	14		48.5
6E-14	M14x1.5					11	32.5	17		49.5
6E-16	M16x1.5					11	32.5	17		49.5
6E-18	M18x1.5					11	33	19		50
6E-22	M22x1.5					12	35.5	24		55
6E-27	M27x1.5					13	37	30		59
6E-30	M30x1.5					14	38	32		62
6E-36	M36x2					16	42	41		70
6E-39	M39x2					18	44	41		74
6E-45	M45x2					20	46	46		79
6E-52	M52x2					22	49	55		86

如需带锁母订货,则请在代号后加"LN" 如6E-30LN
In case if you are interested to order the adapter with lock nut,please insert suffix"LN" after our part NO.,for example 6E-30LN.

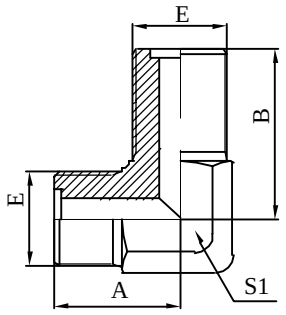

6E9

90°公制外螺纹O型圈平面密封过板接头
90°METRIC MALE O-RING BULKHEAD

代号 PART NO.	螺纹 THREADE		O型圈(外径X线径)			尺 寸 DIMENSIONS				
	E		E端			A	B	S1		
6E9-12	M12x1.5		8x1.9			25	44.5	11		
6E9-14	M14x1.5		10x1.9			27	46.5	14		
6E9-16	M16x1.5		11x1.9			29	48	17		
6E9-18	M18x1.5		13x1.9			32	50	19		
6E9-22	M22x1.5		16x2.4			37	54	22		
6E9-27	M27x1.5		18x2.4			41	58.5	27		
6E9-30	M30x1.5		24x2.4			49	61.5	33		
6E9-36	M36x2		30x3.1			47	71	33		
6E9-39	M39x2		32x3.1			57	76	44		
6E9-45	M45x2		38x3.1			55	81	44		
6E9-52	M52x2		40x3.1			59	86	55		

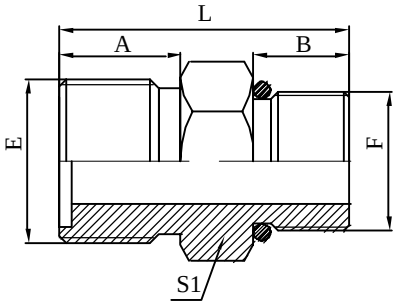

1EH

公制外螺纹O型圈平面密封
公制外螺纹重系列
METRIC MALE O-RING

代号 PART NO.	螺纹 THREADE					尺 寸 DIMENSIONS				
	E	F				A	B	S1	L	
1EH-12-10	M12x1.5	M10x1				11	11	14	28	
1EH-14-12	M14x1.5	M12x1.5				11	11	17	28	
1EH-16-14	M16x1.5	M14x1.5				11	11	19	28	
1EH-18-16	M18x1.5	M16x1.5				11	11	22	29	
1EH-22-18	M22x1.5	M18x1.5				12	11	24	31	
1EH-27-22	M27x1.5	M22x1.5				13	12	30	34	
1EH-30-27	M30x1.5	M27x1.5				14	13	32	37	

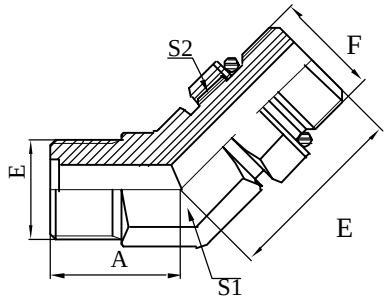

1EH4-OG

45°公制外螺纹O型圈平面密封/
可调向柱端重系列
45°METRIC MALE O-RING/
ADJUSTABLE STUD

代号 PART NO.	螺纹 THREADE				尺 寸 DIMENSIONS				
	E	F			A	B	S1	S2	
1EH4-12-10OG	M12x1.5	M10x1			20	25.5	11	14	
1EH4-14-12OG	M14x1.5	M12x1.5			22	30	14	17	
1EH4-16-14OG	M16x1.5	M14x1.5			22	30.5	17	19	
1EH4-18-16OG	M18x1.5	M16x1.5			24	34	19	22	
1EH4-22-18OG	M22x1.5	M18x1.5			27	38	22	24	
1EH4-27-22OG	M27x1.5	M22x1.5			33	40.5	27	27	
1EH4-30-27OG	M30x1.5	M27x1.5			33	48	27	32	
1EH4-36-33OG	M36x2	M33x2			37	49.5	33	41	
1EH4-39-33OG	M39x2	M33x2			41	52	44	41	
1EH4-45-42OG	M45x2	M42x2			41	54	44	50	
1EH4-52-48OG	M52x2	M48x2			47	58.5	53	55	

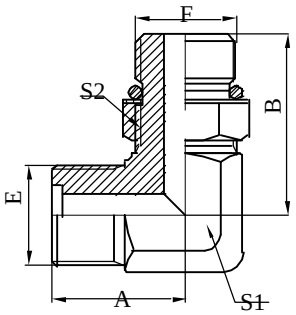

1EH9-OG

90°公制外螺纹O型圈平面密封/
可调向柱端重系列
90°METRIC MALE O-RING/
ADJUSTABLE STUD

代号 PART NO.	螺纹 THREADE				尺 寸 DIMENSIONS				
	E	F			A	B	S1	S2	
1EH9-12-10	M12x1.5	M10x1			25	28.5	11	14	
1EH9-14-12	M14x1.5	M12x1.5			29	33.2	14	17	
1EH9-16-14	M16x1.5	M14x1.5			30	36	17	19	
1EH9-18-16	M18x1.5	M16x1.5			33	39	19	22	
1EH9-22-18	M22x1.5	M18x1.5			37	44	22	24	
1EH9-27-22	M27x1.5	M22x1.5			41	48	27	32	
1EH9-30-27	M30x1.5	M27x1.5			41	57	27	41	
1EH9-36-33	M36x2	M33x2			49	60.5	33	41	
1EH9-39-33	M39x2	M33x2			57	64	44	44	
1EH9-45-42	M45x2	M42x2			57	67.5	44	50	
1EH9-52-48	M52x2	M48x2			59	73.5	55	55	

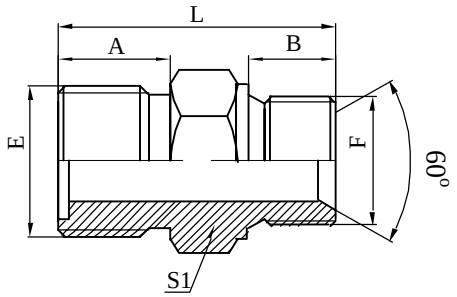

1EM

公制外螺纹O型圈平面密封/
60°内锥六角端面组合垫圈
METRIC MALE O-RING/
60°SEAT BONDED SEAL

代号 PART NO.	螺纹 THREADE					尺 寸 DIMENSIONS				
	E	F				A	B	S1		L
1EM-14-12	M14x1.5	M12x1.5				11	10	17		28
1EM-14	M14x1.5	M14x1.5				11	11	19		28
1EM-22-16	M22x1.5	M16x1.5				11	12	22		30
1EM-22-18	M22x1.5	M18x1.5				11	12	24		31
1EM-22	M22x1.5	M22x1.5				12	14	27		35

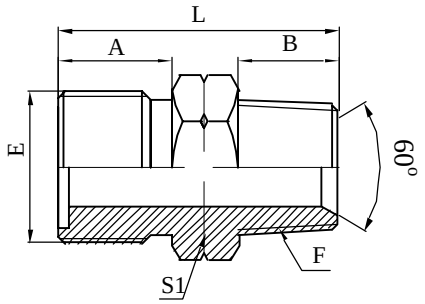

1EN

公制外螺纹O型圈/布锥管外螺纹
METRIC MALE O-RING/NPT MALE

代号 PART NO.	螺纹 THREADE					尺 寸 DIMENSIONS				
	E	F				A	B	S1		L
1EN-14-04	M14x1.5	Z1/4"				11	14	17		31
1EN-14-06	M14x1.5	Z3/8"				11	14	19		31
1EN-16-04	M16x1.5	Z1/4"				11	14	17		31
1EN-16-08	M16x1.5	Z1/2"				11	19	24		38
1EN-18-06	M18x1.5	Z3/8"				11	14	19		31
1EN-22-08	M22x1.5	Z1/2"				12	19	24		39
1EN-24-08	M24x1.5	Z1/2"				13	19	30		41
1EN-27-12	M27x1.5	Z3/4"				13	19.5	32		42.5
1EN-30-12	M30x1.5	Z3/4"				14	19.5	32		43.5
1EN-36-16	M36x2	Z1"				16	24	41		52
1EN-39-16	M39x2	Z1"				18	24	41		54
1EN-45-20	M45x2	Z1.1/4"				20	25	46		58
1EN-52-20	M52x2	Z1.1/4"				22	25	55		62
1EN-60-24	M60x2	Z1.1/2"								

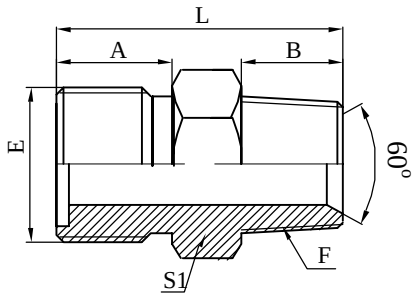

1ET

公制外螺纹O型圈/英锥管外螺纹
METRIC MALE O-RING/BSPT MALE

代号 PART NO.	螺纹 THREADE					尺 寸 DIMENSIONS				
	E	F				A	B	S1		L
1ET-14-04	M14x1.5	ZG1/4"				11	14	17		31
1ET-14-06	M14x1.5	ZG3/8"				11	14	19		31
1ET-16-04	M16x1.5	ZG1/4"				11	14	17		31
1ET-16-08	M16x1.5	ZG1/2"				11	19	24		38
1ET-18-06	M18x1.5	ZG3/8"				11	14	19		31
1ET-22-08	M22x1.5	ZG1/2"				12	19	24		39
1ET-27-08	M24x1.5	ZG1/2"				13	19	27		41
1ET-27-12	M27x1.5	ZG3/4"				13	19.5	32		42.5
1ET-30-12	M30x1.5	ZG3/4"				14	19.5	32		43.5
1ET-36-16	M36x2	ZG1"				16	24	41		52
1ET-39-16	M39x2	ZG1"				18	24	41		54
1ET-45-20	M45x2	ZG1.1/4"				20	25	46		58
1ET-52-20	M52x2	ZG1.1/4"				22	25	55		62
1ET-60-24	M60x2	ZG1.1/2"				24	25	70		66

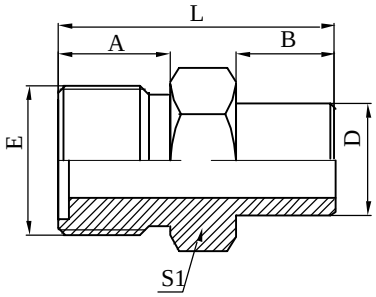

1EW

公制外螺纹O型圈平面密封/焊接管
METRIC MALE O-RING/BUTT-WELD TUBE

代号 PART NO.	螺纹 THREADE					尺 寸 DIMENSIONS				
	E					A	B	D	S1	L
1EW-12-06	M12x1.5					11	8	6	14	25
1EW-14-08	M14x1.5					11	8	8	17	25
1EW-16-10	M16x1.5					11	8	10	17	25
1EW-18-12	M18x1.5					11	12	12	19	29
1EW-22-14	M22x1.5					12	12	14	24	32
1EW-27-18	M27x1.5					13	12	18	30	34
1EW-30-22	M30x1.5					14	14	22	32	38
1EW-36-28	M36x2					16	16	28	41	44
1EW-39-30	M39x2					18	16	30	41	46
1EW-45-38	M45x2					20	18	38	46	51
1EW-52-42	M52x2					22	18	42	55	55

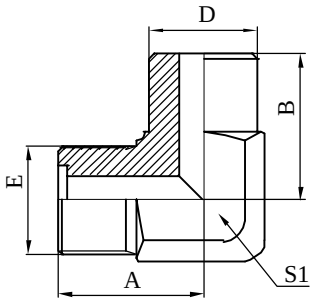

1EW9

90°公制外螺纹O型圈平面密封/焊接管
90°METRIC MALE O-RING/
BUTT-WELD TUBE

代号 PART NO.	螺纹 THREADE					尺 寸 DIMENSIONS				
	E					A	B	D	S1	
1EW9-12-06	M12x1.5					25	16.5	6	11	
1EW9-14-08	M14x1.5					29	17.5	8	14	
1EW9-16-10	M16x1.5					30	19.5	10	17	
1EW9-18-12	M18x1.5					33	25	12	19	
1EW9-22-14	M22x1.5					37	27	14	22	
1EW9-27-18	M27x1.5					41	29.5	18	27	
1EW9-30-22	M30x1.5					41	33.5	22	27	
1EW9-36-28	M36x2					47	39	28	33	
1EW9-39-30	M39x2					57	43	30	44	
1EW9-45-38	M45x2					57	47.5	38	44	
1EW9-52-42	M52x2					59	50	42	55	

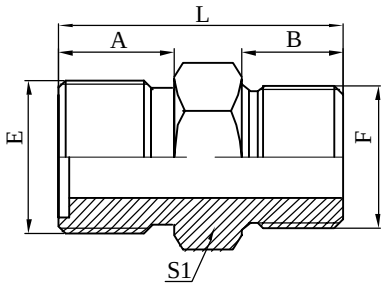

1EZ

公制外螺纹O型圈平面密封/
英管螺纹组合垫密封
METRIC MALE O-RING/
BSP MALE

代号 PART NO.	螺纹 THREADE					尺 寸 DIMENSIONS				
	E	F				A	B		S1	L
1EZ-14-04	M14x1.5	G1/4"X19				11	12		19	29
1EZ-16-04	M16x1.5	G1/4"X19				11	12		19	29
1EZ-16-06	M16x1.5	G3/8"X19				11	12		22	30
1EZ-18-06	M18x1.5	G3/8"X19				11	12		22	30
1EZ-18-08	M18x1.5	G1/2"X14				11	14		27	34
1EZ-22-08	M22x1.5	G1/2"X14				12	14		27	35
1EZ-27-08	M27x1.5	G1/2"X14				13	14		27	36
1EZ-27-12	M27x1.5	G3/4"X14				13	16		32	39
1EZ-30-12	M30x1.5	G3/4"X14				14	16		32	40
1EZ-30-16	M30x1.5	G1"X11				14	18		41	44
1EZ-36-16	M36x2	G1"X11				16	18		41	46

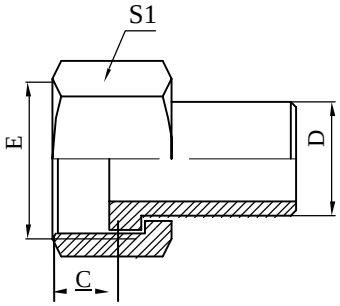

2WE

焊接管/公制内螺纹O型圈平面密封
BUTT-WELD TUBE/METRIC FEMALE O-RING

代号 PART NO.	螺纹 THREADE		管子直径 TUBE O.D.			尺 寸 DIMENSIONS				
	E					C	D		S1	
2WE-06-12	M12x1.5		6			8	6		14	
2WE-08-14	M14x1.5		8			8	8		17	
2WE-10-16	M16x1.5		10			8	10		19	
2WE-12-18	M18x1.5		12			8.5	12		22	
2WE-14-22	M22x1.5		14			10	14		27	
2WE-18-27	M27x1.5		18			10.5	18		32	
2WE-22-30	M30x1.5		22			11	22		36	
2WE-28-36	M36x2		28			13	28		41	
2WE-30-39	M39x2		30			13	30		46	
2WE-38-52	M52x2		38			17	38		60	
2WE-42-52	M52x2		42			17	42		60	
2WE-50-60	M60x2		50			20	50		70	
2WE-52-64	M64x2		52			23	52		75	

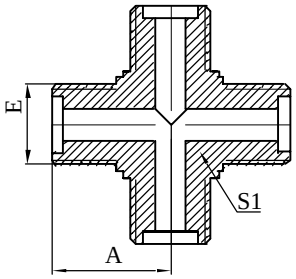

XE

公制外螺纹O型圈平面密封四通接头
METRIC MALE O-RING CROSS

代号 PART NO.	螺纹 THREADE					尺 寸 DIMENSIONS				
	E					A		S1		
XE-14	M14x1.5					22.5		14		
XE-16	M16x1.5					24		17		
XE-18	M18x1.5					26		19		
XE-22	M22x1.5					29		22		
XE-27	M27x1.5					32.5		27		
XE-30	M30x1.5					35.5		30		
XE-36	M36x2					42		33		
XE-39	M39x2					47.5		41		
XE-45	M45x2					52.5		46		
XE-52	M52x2					57		55		

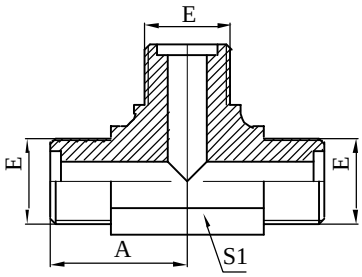

AE

公制外螺纹O型圈平面密封三通接头
METRIC MALE O-RING TEE

代号 PART NO.	螺纹 THREADE					尺 寸 DIMENSIONS				
	E					A		S1		
AE-12	M12x1.5					25		11		
AE-14	M14x1.5					27		14		
AE-16	M16x1.5					29		17		
AE-18	M18x1.5					31		19		
AE-22	M22x1.5					34		22		
AE-27	M27x1.5					40		27		
AE-30	M30x1.5					40		27		
AE-36	M36x2					46		33		
AE-39	M39x2					57		44		

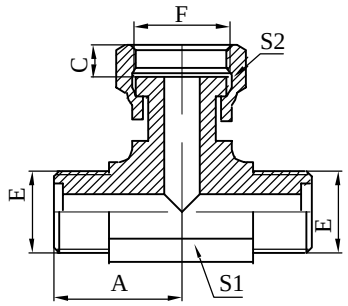

BE

公制外螺纹O型圈/公制内
螺纹平面密封三通接头
METRIC MALE O-RING
/METRIC FEMALE TEE

代号 PART NO.	螺纹 THREADE					尺 寸 DIMENSIONS				
	E	F				A	C	S1	S2	
BE-12	M12x1.5	M12x1.5				25	8	11	17	
BE-14	M14x1.5	M14x1.5				27	9	14	19	
BE-16	M16x1.5	M16x1.5				29	9.5	17	22	
BE-18	M18x1.5	M18x1.5				31	9.5	19	24	
BE-22	M22x1.5	M22x1.5				34	10	22	27	
BE-27	M27x1.5	M27x1.5				40	10.5	27	32	
BE-30	M30x1.5	M30x1.5				40	11.5	27	36	
BE-36	M36x2	M36x2				46	13.5	33	41	
BE-39	M39x2	M39x2				57	13.5	44	46	

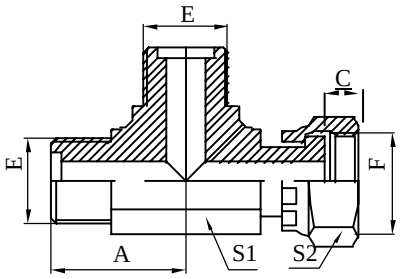

CE

公制外螺纹O型圈/公制内
螺纹平面密封三通接头
METRIC MALE O-RING
/METRIC FEMALE TEE

代号 PART NO.	螺纹 THREADE					尺 寸 DIMENSIONS				
	E	F				A	C	S1	S2	
CE-12	M12x1.5	M12x1.5				25	8	11	17	
CE-14	M14x1.5	M14x1.5				27	9	14	19	
CE-16	M16x1.5	M16x1.5				29	9.5	17	22	
CE-18	M18x1.5	M18x1.5				31	9.5	19	24	
CE-22	M22x1.5	M22x1.5				34	10	22	27	
CE-27	M27x1.5	M27x1.5				40	10.5	27	32	
CE-30	M30x1.5	M30x1.5				40	11.5	27	36	
CE-36	M36x2	M36x2				46	13.5	33	41	
CE-39	M39x2	M39x2				57	13.5	44	46	

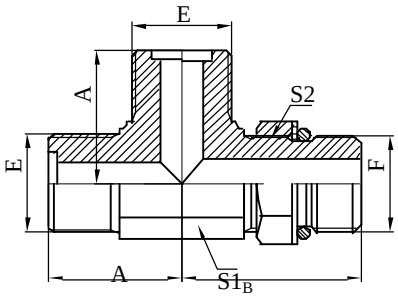

AEEH-OG

公制外螺纹O型圈平面密封/
公制外螺纹可调向柱端重系列主支三通
METRIC MALE O-RING/
METIRC MALE ADJUSTABLE STUD
S-SERIES RUN TEE

代号 PART NO.	螺纹 THREADE					尺 寸 DIMENSIONS				
	E	F				A	B	S1	S2	
AEEH-12-12-10OG	M12x1.5	M10x1				25	28.5	11	14	
AEEH-14-14-12OG	M14x1.5	M12x1.5				27	33.2	14	17	
AEEH-16-16-14OG	M16x1.5	M14x1.5				29	36	17	19	
AEEH-18-18-16OG	M18x1.5	M16x1.5				31	39	19	22	
AEEH-22-22-18OG	M22x1.5	M18x1.5				34	44	22	24	
AEEH-27-27-22OG	M27x1.5	M22x1.5				40	48	27	27	
AEEH-30-30-27OG	M30x1.5	M27x1.5				40	57	27	32	
AEEH-36-36-33OG	M36x2	M33x2				46	60.5	33	41	
AEEH-39-39-33OG	M39x2	M33x2				57	64	44	41	

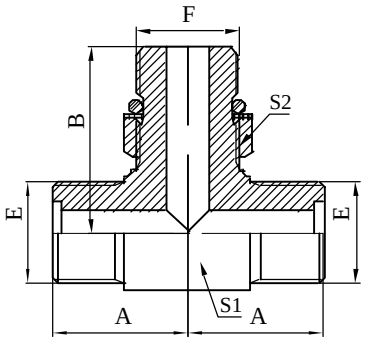

AEHE-OG

公制外螺纹O型圈平面密封/
公制外螺纹可调向柱端重系列分支三通
METRIC MALE O-RING/
METIRC MALE ADJUSTABLE STUD
S-SERIES BRANCH TEE

代号 PART NO.	螺纹 THREADE					尺 寸 DIMENSIONS				
	E	F				A	B	S1	S2	
AEHE-12-10-12OG	M12x1.5	M10x1				25	28.5	11	14	
AEHE-14-12-14OG	M14x1.5	M12x1.5				27	33.2	14	17	
AEHE-16-14-16OG	M16x1.5	M14x1.5				29	36	17	19	
AEHE-18-16-18OG	M18x1.5	M16x1.5				31	39	19	22	
AEHE-22-18-22OG	M22x1.5	M18x1.5				34	44	22	24	
AEHE-27-22-27OG	M27x1.5	M22x1.5				40	48	27	27	
AEHE-30-27-30OG	M30x1.5	M27x1.5				40	57	27	32	
AEHE-36-33-36OG	M36x2	M33x2				46	60.5	33	41	
AEHE-39-33-39OG	M39x2	M33x2				57	64	44	41	

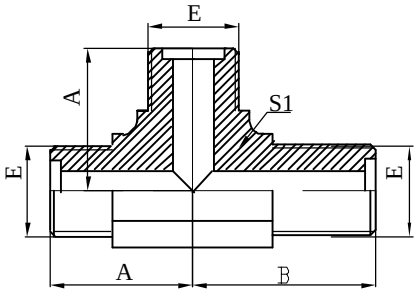

AEE6E

90°公制外螺纹O型圈平面密封过板接头
90°METRIC MALE O-RING BULKHEAD RUN TEE

代号 PART NO.	螺纹 THREADE					尺 寸 DIMENSIONS				
	E					A	B	S1		
AEE6E-12	M12x1.5					25	44.5	11		
AEE6E-14	M14x1.5					27	46.5	14		
AEE6E-16	M16x1.5					29	48	17		
AEE6E-18	M18x1.5					31	50	19		
AEE6E-22	M22x1.5					34	54	22		
AEE6E-27	M27x1.5					40	58.5	27		
AEE6E-30	M30x1.5					40	61.5	27		
AEE6E-36	M36x2					46	71	33		
AEE6E-39	M39x2					57	76	44		

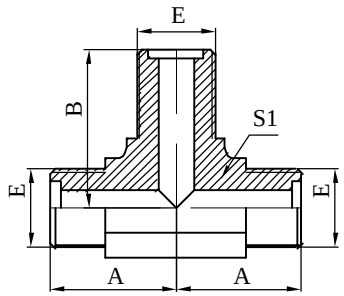

AE6EE

公制外螺纹O型圈平面密封过板分支三通
METRIC MALE O-RING BULKHEAD
BRANCH TEE

代号 PART NO.	螺纹 THREADE					尺 寸 DIMENSIONS				
	E					A	B	S1		
AE6EE-12	M12x1.5					25	44.5	11		
AE6EE-14	M14x1.5					27	46.5	14		
AE6EE-16	M16x1.5					29	48	17		
AE6EE-18	M18x1.5					31	50	19		
AE6EE-22	M22x1.5					34	54	22		
AE6EE-27	M27x1.5					40	58.5	27		
AE6EE-30	M30x1.5					40	61.5	27		
AE6EE-36	M36x2					46	71	33		
AE6EE-39	M39x2					57	76	44		

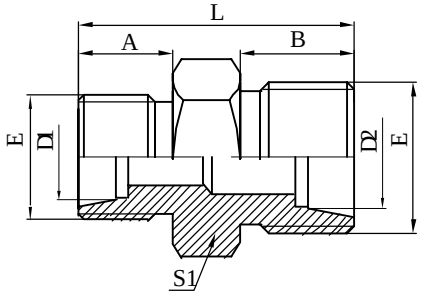

1C

公制外螺纹24°轻系列变径
METRIC MALE 24°L.T. REDUCERS

代号 PART NO.	螺纹 THREADE		管子外径 TUBE O.D.			尺 寸 DIMENSIONS				
	E		D1	D2		A	B	S1		L
1C-12-14	M12x1.5	M14x1.5	6	8		10	10	14		26
1C-12-16	M12x1.5	M16x1.5	6	10		10	11	17		27
1C-12-18	M12x1.5	M18x1.5	6	12		10	11	19		27
1C-14-16	M14x1.5	M16x1.5	8	10		11	11	17		28
1C-14-18	M14x1.5	M18x1.5	8	12		11	11	19		28
1C-16-18	M16x1.5	M18x1.5	10	12		11	11	19		28
1C-16-22	M16x1.5	M22x1.5	10	15		11	12	24		30
1C-16-26	M16x1.5	M26x1.5	10	18		11	12	27		33
1C-18-22	M18x1.5	M22x1.5	12	15		11.5	12	24		31
1C-18-26	M18x1.5	M26x1.5	12	18		11.5	12	27		32
1C-18-30	M18x1.5	M30x2	12	22		11.5	14	32		35.5
1C-22-26	M22x1.5	M26x1.5	15	18		12.5	12	27		33
1C-22-30	M22x1.5	M30x2	15	22		12.5	14	32		36.5
1C-26-30	M26x1.5	M30x2	18	22		12	14	32		37
1C-26-36	M26x1.5	M36x2	18	28		12	14	36		37
1C-30-36	M30x2	M36x2	22	28		14	14	36		39
1C-30-45	M30x2	M45x2	22	35		14	16	46		43
1C-33-45	M33x2	M45x2	25	35		16	16	46		45

备注:如需带卡套及卡套螺母整套订货,则请在代号后加"RN",如"1C-22-26RN"
Remark:In case if you are interested to order the adapter in complete set with cutting ring and nut,it is necessary to insert suffix"RN" arter our part NO.,for example 1C-22-26RN.

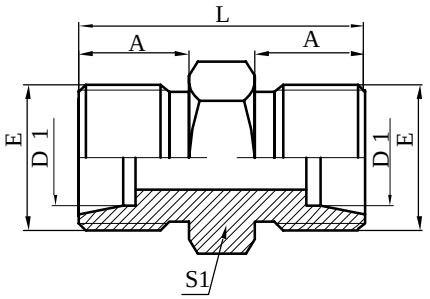

1C

公制外螺纹24°轻系列
METRIC MALE 24°L.T.

代号 PART NO.	螺纹 THREADE		管子外径 TUBE O.D.			尺 寸 DIMENSIONS				
	E		D1			A		S1		L
1C-12	M12x1.5		6			10		12		26
1C-14	M14x1.5		8			11		14		28
1C-16	M16x1.5		10			11		17		28
1C-18	M18x1.5		12			11.5		19		29
1C-22	M22x1.5		15			12.5		24		33
1C-26	M26x1.5		18			12		27		34
1C-30	M30x2		22			14		32		39
1C-36	M36x2		28			16		36		43
1C-45	M45x2		35			16		46		45
1C-52	M52x2		42			16		55		49

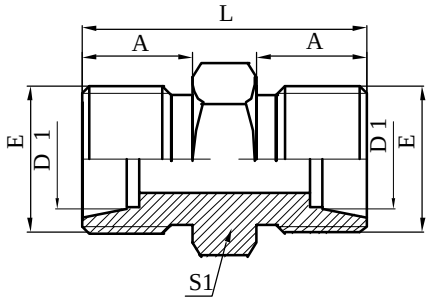

1D

公制外螺纹24°重系列
METRIC MALE 24°H.T.

代号 PART NO.	螺纹 THREADE		管子外径 TUBE O.D.			尺 寸 DIMENSIONS				
	E		D1			A		S1		L
1D-14	M14x1.5		6			12		14		30
1D-16	M16x1.5		8			12		17		30
1D-18	M18x1.5		10			12		19		30
1D-20	M20x1.5		12			12		22		31
1D-22	M22x1.5		14			14		24		36
1D-24	M24x1.5		16			14		27		38
1D-30	M30x2		20			16		32		43
1D-36	M36x2		25			18		36		47
1D-42	M42x2		30			20		46		52
1D-52	M52x2		38			22		55		61

备注:如需带卡套及卡套螺母整套订货,则请在代号后加"RN",如"1D-22RN" (同上)
Remark:In case if you are interested to order the adapter in complete set with cutting ring and nut,it is necessary to insert suffix"RN" arter our part NO.,for example 1D-22RN. (the same with above)

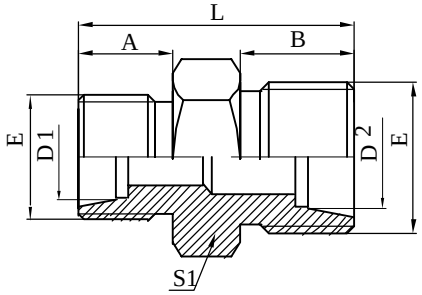

1D

公制外螺纹24°重系列变径
METRIC MALE 24°H.T. REDUCERS

代号 PART NO.	螺纹 THREADE		管子外径 TUBE O.D.			尺 寸 DIMENSIONS				
	E		D1	D2		A	B	S1		L
1D-14-16	M14x1.5	M16x1.5	6	8		12	12	17		30
1D-14-18	M14x1.5	M18x1.5	6	10		12	12	19		30
1D-14-20	M14x1.5	M20x1.5	6	12		12	12	22		32
1D-16-18	M16x1.5	M18x1.5	8	10		12	12	19		30
1D-16-20	M16x1.5	M20x1.5	8	12		12	12	22		32
1D-18-20	M18x1.5	M20x1.5	10	12		12	12	22		32
1D-18-22	M18x1.5	M22x1.5	10	14		12	14	24		34
1D-18-30	M18x1.5	M30x2	10	20		12	16	32		39
1D-20-22	M20x1.5	M22x1.5	12	14		12	14	24		34
1D-20-24	M20x1.5	M24x1.5	12	16		12	14	27		36
1D-20-30	M20x1.5	M30x2	12	20		12	16	32		39
1D-22-24	M22x1.5	M24x1.5	14	16		14	14	27		38
1D-24-30	M24x1.5	M30x2	16	20		14	16	32		41
1D-24-36	M24x1.5	M36x2	16	25		14	18	36		43
1D-30-36	M30x2	M36x2	20	25		16	18	36		45
1D-30-42	M30x2	M42x2	20	30		16	20	46		48
1D-36-42	M36x2	M42x2	25	30		18	20	46		50
1D-42-52	M42x2	M52x2	30	38		20	22	55		59

备注:如需带卡套及卡套螺母整套订货,则请在代号后加"RN",如"1D-22-24RN"
Remark:In case if you are interested to order the adapter in complete set with cutting ring and nut,it is necessary to insert suffix"RN" arter our part NO.,for example 1D-22-24RN.

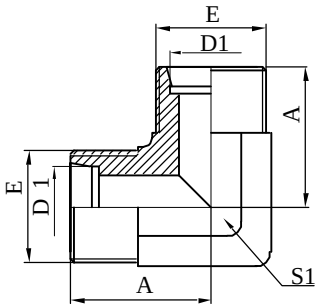

1C9

90°公制外螺纹24°轻系列
90°METRIC MALE 24°L.T.

代号 PART NO.	螺纹 THREADE		管子外径 TUBE O.D.			尺 寸 DIMENSIONS				
	E		D1			A		S1		
1C9-12	M12x1.5		6			25		11		
1C9-14	M14x1.5		8			29		14		
1C9-16	M16x1.5		10			30		17		
1C9-18	M18x1.5		12			33		19		
1C9-22	M22x1.5		15			37		22		
1C9-26	M26x1.5		18			41		27		
1C9-30	M30x2		25			41		27		
1C9-36	M36x2		28			46		33		
1C9-45	M45x2		35			55		44		
1C9-52	M52x2		42			59		55		

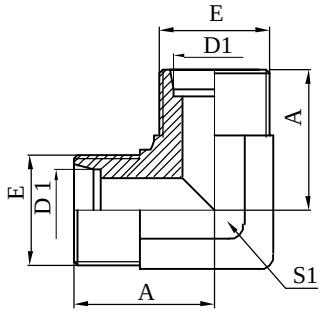

1D9

90°公制外螺纹24°重系列
90°METRIC MALE 24°H.T.

代号 PART NO.	螺纹 THREADE		管子外径 TUBE O.D.			尺 寸 DIMENSIONS				
	E		D1			A		S1		
1D9-14	M14x1.5		6			29		14		
1D9-16	M16x1.5		8			30		17		
1D9-18	M18x1.5		10			33		19		
1D9-20	M20x1.5		12			37		22		
1D9-22	M22x1.5		14			37		22		
1D9-24	M24x1.5		16			33		24		
1D9-30	M30x2		20			41		27		
1D9-42	M42x2		30			57		44		
1D9-52	M52x2		38			59		50		

备注:如需带卡套及卡套螺母整套订货,则请在代号后加"RN",如"1D9-22RN" (同上)
Remark:In case if you are interested to order the adapter in complete set with cutting ring and nut,it is necessary to insert suffix"RN" arter our part NO.,for example 1D9-22RN.(the same with above)

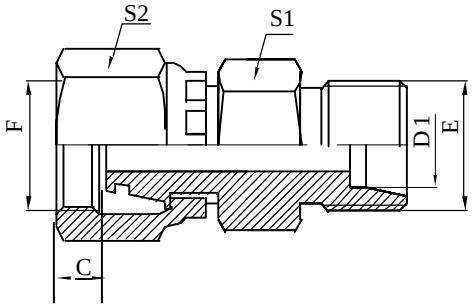

2C

公制内螺纹24°/公制外螺纹24°轻系列
METRIC FEMALE 24°/METRIC MALE 24°L.T.

代号 PART NO.	螺纹 THREADE		管子外径 TUBE O.D.			尺 寸 DIMENSIONS				
	E	F	D1			C		S1	S2	
2C-12	M12x1.5	M12x1.5	6			2		12	17	
2C-12-14	M12x1.5	M14x1.5	6			3.5		14	19	
2C-12-16	M12x1.5	M16x1.5	6			3.5		14	22	
2C-14	M14x1.5	M14x1.5	8			3.5		14	19	
2C-14-16	M14x1.5	M16x1.5	8			3.5		14	22	
2C-14-18	M14x1.5	M18x1.5	8			3.5		17	24	
2C-16	M16x1.5	M16x1.5	10			3.5		17	22	
2C-16-18	M16x1.5	M18x1.5	10			3.5		17	24	
2C-16-22	M16x1.5	M22x1.5	10			3		22	27	
2C-18	M18x1.5	M18x1.5	12			3.5		17	24	
2C-18-22	M18x1.5	M22x1.5	12			3		22	27	
2C-12-26	M12x1.5	M26x1.5	6			3.5		24	32	
2C-22-26	M22x1.5	M26x1.5	15			3.5		24	32	
2C-26	M26x1.5	M26x1.5	18			3.5		24	32	
2C-26-30	M26x1.5	M30x2	18			4.5		30	36	
2C-26-36	M26x1.5	M36x2	18			4.5		36	41	
2C-30	M30x2	M30x2	22			4.5		30	36	
2C-30-36	M30x2	M36x2	22			4.5		36	41	
2C-30-45	M30x2	M45x2	22			5.5		46	55	
2C-36-45	M36x2	M45x2	28			5.5		46	55	
2C-45	M45x2	M45x2	35			5.5		46	55	
2C-45-52	M45x2	M52x2	35			6.5		55	60	
2C-52	M52x2	M52x2	42			6.5		55	60	

备注:如需带卡套及卡套螺母整套订货,则请在代号后加"RN",如"2C-22-26RN"
Remark:In case if you are interested to order the adapter in complete set with cutting ring and nut,it is necessary to insert suffix"RN" arter our part NO.,for example 2C-22-26RN.

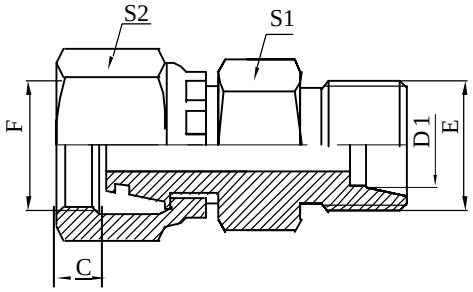

2D

公制内螺纹24°/公制外螺纹24°重系列
METRIC FEMALE 24°/METRIC MALE 24°H.T.

代号 PART NO.	螺纹 THREADE		管子外径 TUBE O.D.			尺 寸 DIMENSIONS				
	E	F	D1			C		S1	S2	
2D-14-16	M14x1.5	M16x1.5	6			3.5		14	22	
2D-14-18	M14x1.5	M18x1.5	6			3		17	24	
2D-14-20	M14x1.5	M20x1.5	6			3		19	27	
2D-16-18	M16x1.5	M18x1.5	8			3		17	24	
2D-16-20	M16x1.5	M20x1.5	8			3		19	27	
2D-16-22	M16x1.5	M22x1.5	8			2.5		22	27	
2D-18-20	M18x1.5	M20x1.5	10			3		19	27	
2D-18-22	M18x1.5	M22x1.5	10			2.5		22	27	
2D-20-22	M20x1.5	M22x1.5	12			2.5		22	27	
2D-16-24	M16x1.5	M24x1.5	8			3.5		22	30	
2D-18-24	M18x1.5	M24x1.5	10			3.5		22	30	
2D-20-24	M20x1.5	M24x1.5	12			3.5		22	30	
2D-20-30	M20x1.5	M30x2	12			4.5		30	36	
2D-22-24	M22x1.5	M24x1.5	14			3.5		22	30	
2D-22-30	M22x1.5	M30x2	14			4.5		30	36	
2D-24-30	M24x1.5	M30x2	16			4.5		27	36	
2D-30-36	M30x2	M36x2	20			3.5		36	41	
2D-30-42	M30x2	M42x2	20			5.5		41	50	
2D-33-42	M33x2	M42x2	22			5.5		41	50	
2D-33-52	M33x2	M52x2	22			7		50	60	
2D-42-52	M42x2	M52x2	30			7		50	60	

备注:如需带卡套及卡套螺母整套订货,则请在代号后加"RN",如"2D-22-30RN"
Remark:In case if you are interested to order the adapter in complete set with cutting ring and nut,it is necessary to insert suffix"RN" arter our part NO.,for example 2D-22-30RN.

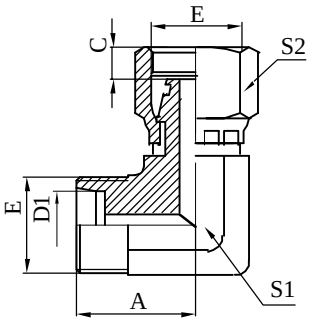

2C9

90°公制内螺纹24°/
公制外螺纹24°轻系列
90°METRIC FEMALE 24°/
METRIC MALE 24°L.T.

代号 PART NO.	螺纹 THREADE		管子外径 TUBE O.D.			尺 寸 DIMENSIONS				
	E	F	D1			A	C	S1	S2	
2C9-12	M12x1.5	M12x1.5	6			25	2	11	17	
2C9-14	M14x1.5	M14x1.5	8			29	3.5	14	19	
2C9-16	M16x1.5	M16x1.5	10			30	3.5	17	22	
2C9-18	M18x1.5	M18x1.5	12			33	3.5	19	24	
2C9-22	M22x1.5	M22x1.5	15			37	3	22	27	
2C9-26	M26x1.5	M26x1.5	18			41	3.5	27	32	
2C9-30	M30x2	M30x2	22			41	4.5	27	36	
2C9-36	M36x2	M36x2	28			46	4.5	33	41	
2C9-45	M45x2	M45x2	35			55	5.5	44	55	
2C9-52	M52x2	M52x2	42			59	6.5	55	60	

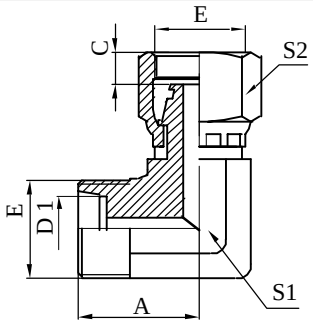

2D9

90°公制内螺纹24°/
公制外螺纹24 °重系列
90°METRIC FEMALE 24°/
METRIC MALE 24 °H.T.

代号 PART NO.	螺纹 THREADE		管子外径 TUBE O.D.			尺 寸 DIMENSIONS				
	E	F	D1			A	C	S1	S2	
2D9-14	M14x1.5	M14x1.5	6			29	3	14	19	
2D9-16	M16x1.5	M16x1.5	8			30	3.5	17	22	
2D9-18	M18x1.5	M18x1.5	10			33	3	19	24	
2D9-20	M20x1.5	M20x1.5	12			37	3	22	27	
2D9-22	M22x1.5	M22x1.5	14			37	2.5	22	27	
2D9-30	M30x2	M30x2	20			41	4.5	27	36	
2D9-36	M36x2	M36x2	25			46	3.5	33	41	
2D9-42	M42x2	M42x2	30			55	5.5	44	50	
2D9-52	M52x2	M52x2	38			59	7	55	60	

备注:如需带卡套及卡套螺母整套订货,则请在代号后加"RN",如"2D9-22RN" (同上)
Remark:In case if you are interested to order the adapter in complete set with cutting ring and nut,it is necessary to insert suffix"RN" arter our part NO.,for example 2D9-22RN.(the same with above)

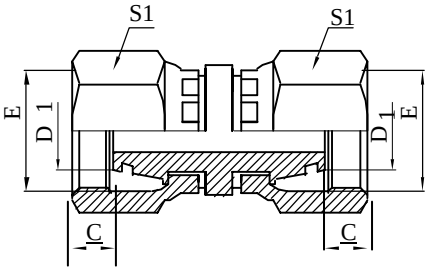

3C

公制内螺纹24°轻系列
METRIC FEMALE 24°L.T.

代号 PART NO.	螺纹 THREADE		管子外径 TUBE O.D.			尺 寸 DIMENSIONS				
	E		D1				C	S1		
3C-12	M12x1.5		6				2	17		
3C-14	M14x1.5		8				3.5	19		
3C-16	M16x1.5		10				3.5	22		
3C-18	M18x1.5		12				3.5	24		
3C-22	M22x1.5		15				3	27		
3C-26	M26x1.5		18				3.5	32		
3C-30	M30x2		22				4.5	36		
3C-36	M36x2		28				4.5	41		
3C-45	M45x2		35				5.5	55		
3C-52	M52x2		42				6.5	60		

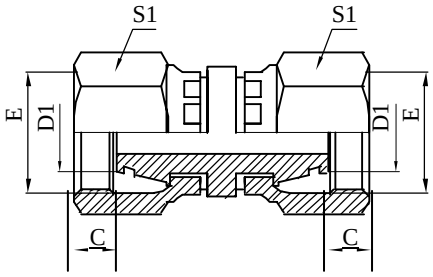

3D

公制内螺纹24°重系列
METRIC FEMALE 24°H.T.

代号 PART NO.	螺纹 THREADE		管子外径 TUBE O.D.			尺 寸 DIMENSIONS				
	E		D1				C	S1		
3D-14	M14x1.5		6				3	19		
3D-16	M16x1.5		8				3.5	22		
3D-18	M18x1.5		10				3	24		
3D-20	M20x1.5		12				3	27		
3D-22	M22x1.5		14				2.5	27		
3D-24	M24x1.5		16				3.5	30		
3D-30	M30x2		20				4.5	36		
3D-36	M36x2		25				3.5	41		
3D-42	M42x2		30				5.5	50		
3D-52	M52x2		38				7	60		

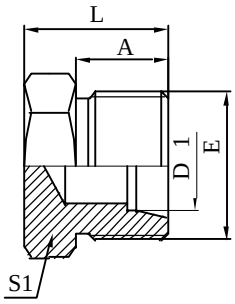

4C

公制螺纹24°轻系列堵头
METRIC MALE 24°L.T. PULG

代号 PART NO.	螺纹 THREADE		管子外径 TUBE O.D.			尺 寸 DIMENSIONS				
	E		D1			A		S1		L
4C-12	M12x1.5		6			10		12		16
4C-14	M14x1.5		8			11		14		17
4C-16	M16x1.5		10			11		17		17
4C-18	M18x1.5		12			11.5		19		17.5
4C-22	M22x1.5		15			12.5		24		20
4C-26	M26x1.5		18			12		27		22
4C-30	M30x2		22			14		32		25
4C-36	M36x2		28			16		36		27
4C-45	M45x2		35			18		46		31
4C-52	M52x2		42			19		55		36

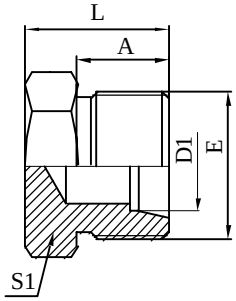

4D

公制螺纹24°重系列堵头
METRIC MALE 24°H.T. PLUG

代号 PART NO.	螺纹 THREADE		管子外径 TUBE O.D.			尺 寸 DIMENSIONS				
	E		D1			A		S1		L
4D-14	M14x1.5		6			12		14		18
4D-16	M16x1.5		8			12		17		18
4D-18	M18x1.5		10			12		19		18
4D-20	M20x1.5		12			12		22		19
4D-22	M22x1.5		14			14		24		22
4D-30	M30x2		20			16		32		26
4D-36	M36x2		25			18		36		29
4D-42	M42x2		30			20		46		32
4D-52	M52x2		38			22		55		39

备注:如需带卡套及卡套螺母整套订货,则请在代号后加"RN",如"4D-22RN" (同上)
Remark:In case if you are interested to order the adapter in complete set with cutting ring and nut,it is necessary to insert suffix"RN" arter our part NO.,for example 4D-22RN. (the same with above)

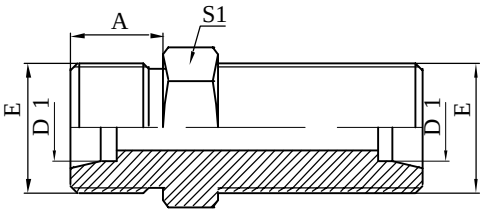

6C

公制外螺纹24°轻系列过板接头
METRIC MALE 24 °L.T. BULKHEAD

代号 PART NO.	螺纹 THREADE		管子外径 TUBE O.D.			尺 寸 DIMENSIONS				
	E		D1			A		S1		
6C-12	M12x1.5		6			10		12		
6C-14	M14x1.5		8			11		14		
6C-16	M16x1.5		10			11		17		
6C-18	M18x1.5		12			11.5		19		
6C-22	M22x1.5		15			12.5		24		
6C-26	M26x1.5		18			12		27		
6C-30	M30x2		22			14		32		
6C-33	M33x2		25			16		36		
6C-45	M45x2		35			18		46		
6C-52	M52x2		42			19		55		

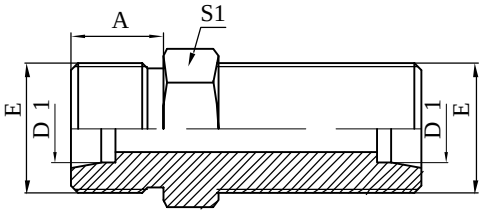

6D

公制外螺纹24°重系列过板接头
METRIC MALE 24°H.T. BULKHEAD

代号 PART NO.	螺纹 THREADE		管子外径 TUBE O.D.			尺 寸 DIMENSIONS				
	E		D1			A		S1		
6D-14	M14x1.5		6			12		14		
6D-16	M16x1.5		8			12		17		
6D-18	M18x1.5		10			12		19		
6D-20	M20x1.5		12			12		22		
6D-22	M22x1.5		14			14		24		
6D-24	M24x1.5		16			14		27		
6D-30	M30x2		20			16		32		
6D-36	M36x2		25			18		36		
6D-42	M42x2		30			20		46		
6D-52	M52x2		38			22		55		

备注:如需带卡套及卡套螺母整套订货,则请在代号后加"RN",如"6D-22RN" 、如需带锁母订货，请在代号后加"LN",如"6D-22LN"(同上)
Remark:In case if you are interested to order the adapter in complete set with cutting ring and nut,it is necessary to insert suffix"RN" arter our part NO.,for example 6D-22RN.order the adapter with cutting ring and nut,insert suffix"LN"after part NO for example "6D-22LN"(the same with above)

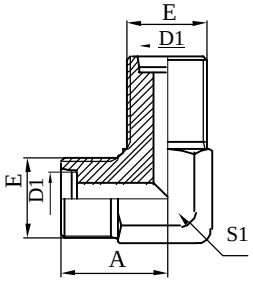

6C9

90°公制外螺纹24°轻系列过板接头
90°METRIC MALE 24°L.T. BULKHEAD

代号 PART NO.	螺纹 THREADE E		管子外径D1 TUBE O.D.			尺 寸 DIMENSIONS A		S1		
6C9-12	M12x1.5		6			25		11		
6C9-14	M14x1.5		8			29		14		
6C9-16	M16x1.5		10			30		17		
6C9-18	M18x1.5		12			33		19		
6C9-22	M22x1.5		15			37		22		
6C9-26	M26x1.5		18			41		27		
6C9-30	M30x2		22			41		27		
6C9-36	M36x2		28			46		33		
6C9-45	M45x2		35			55		44		
6C9-52	M52x2		42			59		55		

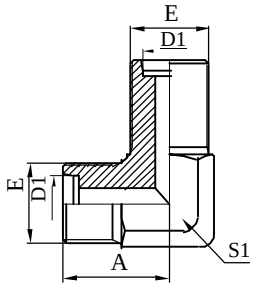

6D9

90°公制外螺纹24°重系列过板接头
90°METRIC MALE 24°H.T. BULKHEAD

代号 PART NO.	螺纹 THREADE E		管子外径 TUBE O.D. D1			尺 寸 DIMENSIONS A		S1		
6D9-14	M14x1.5		6			29		14		
6D9-16	M16x1.5		8			30		17		
6D9-18	M18x1.5		10			33		19		
6D9-20	M20x1.5		12			37		22		
6D9-22	M22x1.5		14			37		22		
6D9-30	M30x2		20			41		27		
6D9-36	M36x2		25			41		27		
6D9-42	M42x2		30			55		44		
6D9-52	M52x2		38			59		55		

备注:如需带卡套及卡套螺母整套订货,则请在代号后加"RN",如"6D9-22RN" 、如需带锁母订货，请在代号后加"LN",如"6D9-22LN"(同上)
Remark:In case if you are interested to order the adapter in complete set with cutting ring and nut,it is necessary to insert suffix"RN" arter our part NO.,for example 6D9-22RN.order the adapter with cutting ring and nut,insert suffix"LN"after part NO for example "6D9-22LN"(the same with above)

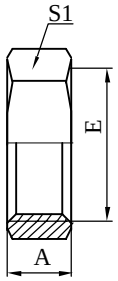

8C

公制螺纹锁母
METRIC LOCK NUT

代号 PART NO.	螺纹 THREADE					尺 寸 DIMENSIONS				
	E					A		S1		
8C-10	M10x1					6		14		
8C-12	M12x1.5					7.5		17		
8C-14	M14x1.5					7.5		19		
8C-16	M16x1.5					7.5		22		
8C-18	M18x1.5					7.5		24		
8C-20	M20x1.5					8		27		
8C-22	M22x1.5					8		27		
8C-24	M24x1.5					8		30		
8C-26	M26x1.5					8		32		
8C-27D	M27x1.5					10		32		
8C-30	M30x2					10		36		
8C-30D	M30x1.5					10		36		
8C-36	M36x2					10		41		
8C-38	M38x2					10		46		
8C-42	M42x2					10		50		
8C-45	M45x2					10		55		
8C-52	M52x2					10		60		

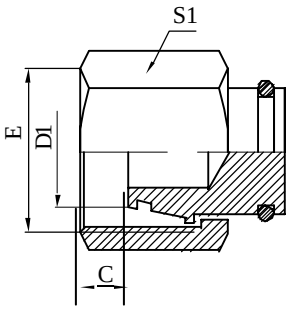

9C

公制内螺纹24°轻系列堵头
METRIC FEMALE 24°L.T. PLUG

代号 PART NO.	螺纹 THREADE		管子外径 TUBE O.D.			尺 寸 DIMENSIONS				
	E		D1				C	S1		
9C-12	M12x1.5		6				2	14		
9C-14	M14x1.5		8				2	17		
9C-16	M16x1.5		10				2	19		
9C-18	M18x1.5		12				2.5	22		
9C-22	M22x1.5		15				3	27		
9C-26	M26x1.5		18				3.5	32		
9C-30	M30x2		22				3.5	36		
9C-36	M36x2		28				4	41		
9C-45	M45x2		35				5	55		
9C-52	M52x2		42				6	60		

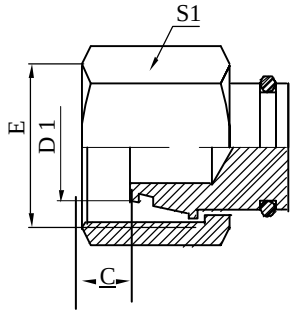

9D

公制内螺纹24°\u37325X系列堵头
METRIC FEMALE 24°H.T. PLUG

代号 PART NO.	螺纹 THREADE		管子外径 TUBE O.D.			尺 寸 DIMENSIONS				
	E		D1				C	S1		
9D-16	M16x1.5		8				2	19		
9D-18	M18x1.5		10				2	22		
9D-20	M20x1.5		12				3	24		
9D-22	M22x1.5		14				2.5	27		
9D-24	M24x1.5		16				3	30		
9D-30	M30x2		20				3.5	36		
9D-36	M36x2		25				3	41		
9D-42	M42x2		30				5	50		
9D-52	M52x2		38				6.5	60		

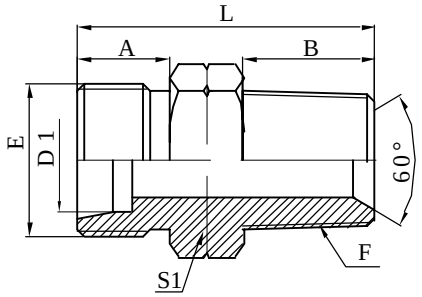

1CN

公制外螺纹24°轻系列/
布锥管外螺纹60 °
METRIC MALE 24°L.T.
/NPT MALE 60°

代号 PART NO.	螺纹 THREADE		管子外径 TUBE O.D.			尺 寸 DIMENSIONS				
	E	F	D1			A	B	S1		L
1CN-12-02	M12x1.5	Z1/8"X27	6			10	10	12		26
1CN-12-04	M12x1.5	Z1/4"X18	6			10	14	14		31
1CN-14-04	M14x1.5	Z1/4"X18	8			11	14	14		31
1CN-16-04	M16x1.5	Z1/4"X18	10			11	14	17		32.5
1CN-16-06	M16x1.5	Z3/8"X18	10			11	14	17		32.5
1CN-18-04	M18x1.5	Z1/4"X18	12			11.5	14	19		31.5
1CN-18-06	M18x1.5	Z3/8"X18	12			11.5	14	19		31.5
1CN-18-08	M18x1.5	Z1/2"X14	12			11.5	19	22		38
1CN-22-08	M22x1.5	Z1/2"X14	15			12.5	19	24		39
1CN-22-20	M22x1.5	Z1.1/4"X11.5	15			12.5	25	46		50.5
1CN-26-08	M26x1.5	Z1/2"X14	18			12	19	27		40
1CN-26-12	M26x1.5	Z3/4"X14	18			12	19.5	27		40
1CN-30-08	M30x2	Z1/2"X14	22			14	19	32		43
1CN-30-12	M30x2	Z3/4"X14	22			14	19.5	32		43.5
1CN-36-16	M36x2	Z1"X11.5	28			16	24	36		51
1CN-36-20	M36x2	Z1.1/4"X11.5	28			16	25	46		54
1CN-45-20	M45x2	Z1.1/4"X11.5	35			18	25	46		56
1CN-52-20	M52x2	Z1.1/4"X11.5	42			19	25	55		61
1CN-52-24	M52x2	Z1.1/2"X11.5	42			19	25	55		61

备注:如需带卡套及卡套螺母整套订货,则请在代号后加"RN",如"1CN-22-08RN"
Remark:In case if you are interested to order the adapter in complete set with cutting ring and nut,it is necessary to insert suffix"RN" arter our part NO.,for example 1CN-22-08RN.

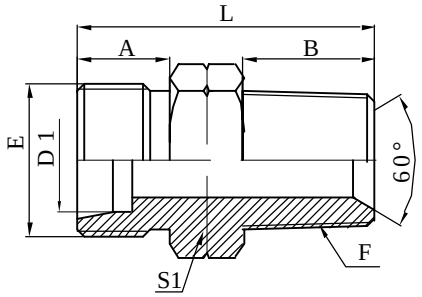

1DN

公制外螺纹24°重系列/
布锥管外螺纹60 °
METRIC MALE 24°H.T.
/NPT MALE 60°

代号 PART NO.	螺纹 THREADE		管子外径 TUBE O.D.			尺 寸 DIMENSIONS				
	E	F	D1			A	B	S1		L
1DN-14-04	M14x1.5	Z1/4"X18	6			12	14	14		32
1DN-16-04	M16x1.5	Z1/4"X18	8			12	14	17		32
1DN-18-04	M18x1.5	Z1/4"X18	10			12	14	19		32
1DN-18-06	M18x1.5	Z3/8"X18	10			12	14	19		32
1DN-20-04	M20x1.5	Z1/4"X18	12			12	14	22		33
1DN-20-06	M20x1.5	Z3/8"X18	12			12	14	22		33
1DN-20-08	M20x1.5	Z1/2"X14	12			12	19	22		38
1DN-22-08	M22x1.5	Z1/2"X14	14			14	19	24		41
1DN-24-08	M24x1.5	Z1/2"X14	16			14	19	27		42
1DN-30-12	M30x2	Z3/4"X14	20			16	19.5	32		45.5
1DN-36-16	M36x2	Z1"X11.5	25			18	24	36		53
1DN-42-16	M42x2	Z1"X11.5	30			20	24	46		57
1DN-42-20	M42x2	Z1.1/4"X11.5	30			20	25	46		53
1DN-52-24	M52x2	Z1.1/2"X11.5	38			22	25	55		64

备注:如需带卡套及卡套螺母整套订货,则请在代号后加"RN",如"1DN-22-08RN"
Remark:In case if you are interested to order the adapter in complete set with cutting ring and nut,it is necessary to insert suffix"RN" arter our part NO.,for example 1DN-22-08RN.

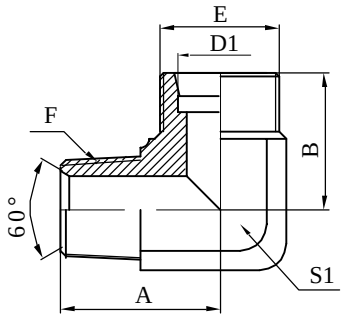

1CN9

90°公制外螺纹24°轻系列/
布锥管外螺纹60°
90°METRIC MALE 24°L.T.
/NPT MALE 60°

代号 PART NO.	螺纹 THREADE		管子外径 TUBE O.D.			尺 寸 DIMENSIONS				
	E	F	D1			A	B	S1		
1CN9-12-02	M12x1.5	Z1/8"X27	6			25	25	11		
1CN9-12-04	M12x1.5	Z1/4"X18	6			27	29	14		
1CN9-14-04	M14x1.5	Z1/4"X18	8			27	29	14		
1CN9-16-06	M16x1.5	Z3/8"X18	10			29	30	17		
1CN9-18-04	M18x1.5	Z1/4"X18	12			33	33	19		
1CN9-18-06	M18x1.5	Z3/8"X18	12			33	33	19		
1CN9-18-08	M18x1.5	Z1/2"X14	12			37	37	22		
1CN9-22-06	M22x1.5	Z3/8"X18	15			37	37	22		
1CN9-22-08	M22x1.5	Z1/2"X14	12			37	37	22		
1CN9-26-08	M26x1.5	Z1/2"X14	18			41	41	27		
1CN9-26-12	M26x1.5	Z3/4"X14	18			41	41	27		
1CN9-30-12	M30x2	Z3/4"X14	22			41	41	27		
1CN9-30-16	M30x2	Z1"X11.5	22			49	49	33		
1CN9-36-16	M36x2	Z1"X11.5	28			46	46	33		
1CN9-45-20	M45x2	Z1.1/4"X11.5	35			55	55	44		
1CN9-52-24	M52x2	Z1.1/2"X11.5	42			57	60	55		

备注:如需带卡套及卡套螺母整套订货,则请在代号后加"RN",如"1CN9-22-08RN"
Remark:In case if you are interested to order the adapter in complete set with cutting ring and nut,it is necessary to insert suffix"RN" arter our part NO.,for example 1CN9-22-08RN.

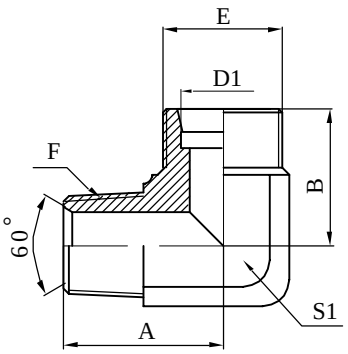

1DN9

90°公制外螺纹24°重系列
/布锥管外螺纹60°
90°METRIC MALE 24°H.T.
/NPT MALE 60°

代号 PART NO.	螺纹 THREADE		管子外径 TUBE O.D.			尺 寸 DIMENSIONS				
	E	F	D1			A	B	S1		
1DN9-14-04	M14x1.5	Z1/4"X18	6			27	29	14		
1DN9-16-04	M16x1.5	Z1/4"X18	8			29	30	17		
1DN9-18-06	M18x1.5	Z3/8"X18	10			33	33	19		
1DN9-20-04	M20x1.5	Z1/4"X18	12			37	37	22		
1DN9-20-06	M20x1.5	Z3/8"X18	12			37	37	22		
1DN9-22-06	M22x1.5	Z3/8"X18	14			37	37	22		
1DN9-22-08	M22x1.5	Z1/2"X14	14			37	37	22		
1DN9-24-06	M24x1.5	Z3/8"X18	16			37	33	24		
1DN9-24-08	M24x1.5	Z1/2"X14	16			33	37	24		
1DN9-30-08	M30x2	Z1/2"X14	20			40	40	27		
1DN9-30-12	M30x2	Z3/4"X14	20			40	40	27		
1DN9-36-16	M36x2	Z1"X11.5	28			49	49	33		
1DN9-42-16	M42x2	Z1"X11.5	30			57	57	44		
1DN9-42-20	M42x2	Z1.1/4"X11.5	30			57	57	44		
1DN9-52-20	M52x2	Z1.1/4"X11.5	38			56	60	55		
1DN9-52-24	M52x2	Z1.1/2"X11.5	38			56	60	55		

备注:如需带卡套及卡套螺母整套订货,则请在代号后加"RN",如"1DN9-22-08RN"
Remark:In case if you are interested to order the adapter in complete set with cutting ring and nut,it is necessary to insert suffix"RN" arter our part NO.,for example 1DN9-22-08RN.

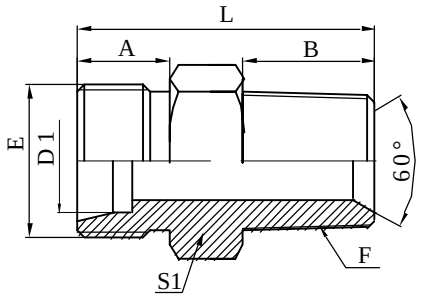

1CT

公制外螺纹24°轻系列/
英锥管外螺纹60°
METRIC MALE 24°L.T./
BSPT MALE 60°

代号 PART NO.	螺纹 THREADE		管子外径 TUBE O.D.			尺 寸 DIMENSIONS				
	E	F	D1			A	B	S1		L
1CT-12-02	M12x1.5	ZG1/8"X28	6			10	10	12		26
1CT-12-04	M12x1.5	ZG1/4"X19	6			10	14	14		31
1CT-14-04	M14x1.5	ZG1/4"X19	8			11	14	14		31
1CT-16-04	M16x1.5	ZG1/4"X19	10			11	14	17		32.5
1CT-16-06	M16x1.5	ZG3/8"X19	10			11	14	17		32.5
1CT-18-04	M18x1.5	ZG1/4"X19	12			11.5	14	19		31.5
1CT-18-06	M18x1.5	ZG3/8"X19	12			11.5	14	19		31.5
1CT-18-08	M18x1.5	ZG1/2"X14	12			11.5	19	22		38
1CT-22-08	M22x1.5	ZG1/2"X14	15			12.5	19	24		39
1CT-22-20	M22x1.5	ZG1.1/4"X11	15			12.5	25	46		50.5
1CT-26-08	M26x1.5	ZG1/2"X14	18			12	19	27		40
1CT-26-12	M26x1.5	ZG3/4"X14	18			12	19.5	27		40
1CT-30-08	M30x2	ZG1/2"X14	22			14	19	32		43
1CT-30-12	M30x2	ZG3/4"X14	22			14	19.5	32		43.5
1CT-36-16	M36x2	ZG1"X11	28			16	24	36		51
1CT-36-20	M36x2	ZG1.1/4"X11	28			16	25	46		54
1CT-45-20	M45x2	ZG1.1/4"X11	35			18	25	46		56
1CT-52-20	M52x2	ZG1.1/4"X11	42			19	25	55		61
1CT-52-24	M52x2	ZG1.1/2"X11	42			19	25	55		61

备注:如需带卡套及卡套螺母整套订货,则请在代号后加"RN",如"1CT-22-08RN"
Remark:In case if you are interested to order the adapter in complete set with cutting ring and nut,it is necessary to insert suffix"RN" arter our part NO.,for example 1CT-22-08RN.

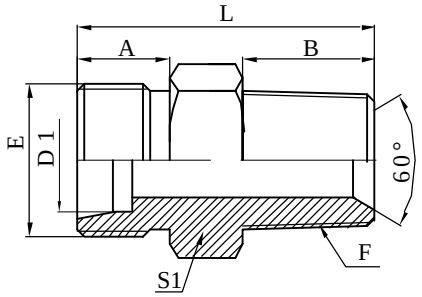

1DT

公制外螺纹24°重系列/
英锥管外螺纹60°
METRIC MALE 24 °H.T./
BSPT MALE 60°

代号 PART NO.	螺纹 THREADE		管子外径 TUBE O.D.			尺 寸 DIMENSIONS				
	E	F	D1			A	B	S1		L
1DT-14-04	M14x1.5	ZG1/4"X19	6			12	14	14		32
1DT-16-04	M16x1.5	ZG1/4"X19	8			12	14	17		32
1DT-18-04	M18x1.5	ZG1/4"X19	10			12	14	19		32
1DT-18-06	M18x1.5	ZG3/8"X19	10			12	14	19		32
1DT-20-04	M20x1.5	ZG1/4"X19	12			12	14	22		33
1DT-20-06	M20x1.5	ZG3/8"X19	12			12	14	22		33
1DT-20-08	M20x1.5	ZG1/2"X14	12			12	19	22		38
1DT-22-08	M22x1.5	ZG1/2"X14	14			14	19	24		41
1DT-24-08	M24x1.5	ZG1/2"X14	16			14	19	27		42
1DT-30-12	M30x2	ZG3/4"X14	20			16	19.5	32		45.5
1DT-36-16	M36x2	ZG1"X11	25			18	24	36		53
1DT-42-16	M42x2	ZG1"X11	30			20	24	46		57
1DT-42-20	M42x2	ZG1.1/4"X11	30			20	25	46		58
1DT-52-24	M52x2	ZG1.1/4"X11	38			22	25	55		64

备注:如需带卡套及卡套螺母整套订货,则请在代号后加"RN",如"1CT-22-08RN"
Remark:In case if you are interested to order the adapter in complete set with cutting ring and nut,it is necessary to insert suffix"RN" arter our part NO.,for example 1CT-22-08RN.

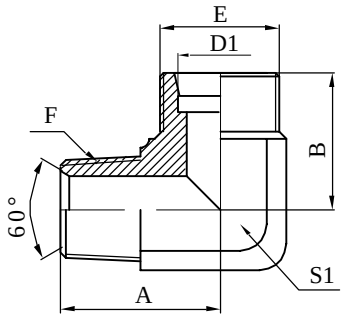

1CT9

90°公制外螺纹24°轻系列/
英锥管外螺纹60°
90°METRIC MALE 24°L.T./
BSPT MALE 60 °

代号 PART NO.	螺纹 THREADE		管子外径 TUBE O.D.			尺 寸 DIMENSIONS				
	E	F	D1			A	B	S1		
1CT9-12-02	M12x1.5	ZG1/8"X28	6			25	25	11		
1CT9-12-04	M12x1.5	ZG1/4"X19	6			27	29	14		
1CT9-14-04	M14x1.5	ZG1/4"X19	8			27	29	14		
1CT9-16-06	M16x1.5	ZG3/8"X19	10			29	30	17		
1CT9-18-04	M18x1.5	ZG1/4"X19	12			33	33	19		
1CT9-18-06	M18x1.5	ZG3/8"X19	12			33	33	19		
1CT9-18-08	M18x1.5	ZG1/2"X14	12			37	37	22		
1CT9-22-06	M22x1.5	ZG3/8"X19	15			37	37	22		
1CT9-22-08	M22x1.5	ZG1/2"X14	12			37	37	22		
1CT9-26-08	M26x1.5	ZG1/2"X14	18			41	41	27		
1CT9-26-12	M26x1.5	ZG3/4"X14	18			41	41	27		
1CT9-30-12	M30x2	ZG3/4"X14	22			41	41	27		
1CT9-30-16	M30x2	ZG1"X11	22			49	49	33		
1CT9-36-16	M36x2	ZG1"X11	28			46	46	33		
1CT9-45-20	M45x2	ZG1.1/4"X11	35			55	55	44		
1CT9-52-24	M52x2	ZG1.1/2"X11	42			57	60	55		

备注:如需带卡套及卡套螺母整套订货,则请在代号后加"RN",如"1CT9-22-08RN"
Remark:In case if you are interested to order the adapter in complete set with cutting ring and nut,it is necessary to insert suffix"RN" arter our part NO.,for example 1CT9-22-08RN.

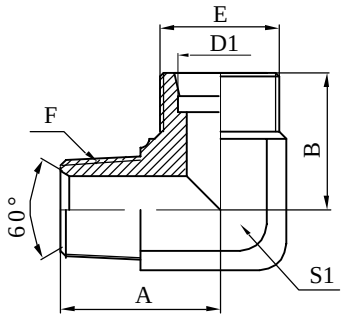

1DT9

90°公制外螺纹24°/
英锥管外螺纹60°重系列
90°METRIC MALE 24°/
BSPT MALE 60° H.T.

代号 PART NO.	螺纹 THREADE		管子外径 TUBE O.D.			尺 寸 DIMENSIONS				
	E	F	D1			A	B	S1		
1DT9-14-04	M14x1.5	ZG1/4"X19	6			27	29	14		
1DT9-16-04	M16x1.5	ZG1/4"X19	8			29	30	17		
1DT9-18-06	M18x1.5	ZG3/8"X19	10			33	33	19		
1DT9-20-04	M20x1.5	ZG1/4"X19	12			37	37	22		
1DT9-20-06	M20x1.5	ZG3/8"X19	12			37	37	22		
1DT9-22-06	M22x1.5	ZG3/8"X19	14			37	37	22		
1DT9-22-08	M22x1.5	ZG1/2"X14	14			37	37	22		
1DT9-24-06	M24x1.5	ZG3/8"X19	16			37	33	24		
1DT9-24-08	M24x1.5	ZG1/2"X14	16			33	37	24		
1DT9-30-08	M30x2	ZG1/2"X14	20			40	40	27		
1DT9-30-12	M30x2	ZG3/4"X14	20			40	40	27		
1DT9-36-16	M36x2	ZG1"X11	25			49	49	33		
1DT9-42-16	M42x2	ZG1"X11	30			57	57	44		
1DT9-42-20	M42x2	ZG1.1/4"X11	30			57	57	44		
1DT9-52-20	M52x2	ZG1.1/4"X11	38			56	60	55		
1DT9-52-24	M52x2	ZG1.1/2"X11	38			56	60	55		

备注:如需带卡套及卡套螺母整套订货,则请在代号后加"RN",如"1DT9-22-08RN"
Remark:In case if you are interested to order the adapter in complete set with cutting ring and nut,it is necessary to insert suffix"RN" arter our part NO.,for example 1DT9-22-08RN.

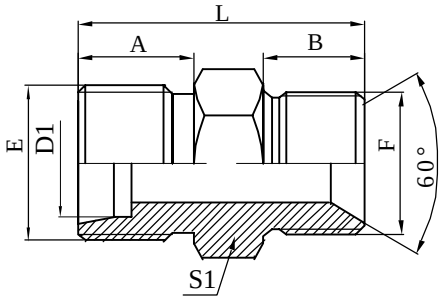

1CB

公制外螺纹24°轻系列/英管螺纹
或60°锥面组合垫密封
METRIC MALE 24°SEAL L.T./BSP MALE
DOUBLE 60°SEAT BONDED SEAL

代号 PART NO.	螺纹 THREADE		管子外径 TUBE O.D.			尺 寸 DIMENSIONS				
	E	F	D1			A	B	S1		L
1CB-12-02	M12x1.5	G1/8"X28	6			10	10	14		26
1CB-12-04	M12x1.5	G1/4"X19	6			10	12	19		28
1CB-14-02	M14x1.5	G1/8"X28	8			11	10	14		27
1CB-14-04	M14x1.5	G1/4"X19	8			11	12	19		29
1CB-14-06	M14x1.5	G3/8"X19	8			11	13.5	22		32
1CB-16-04	M16x1.5	G1/4"X19	10			11	12	19		29
1CB-16-06	M16x1.5	G3/8"X19	10			11	13.5	22		32.5
1CB-16-08	M16x1.5	G1/2"X14	10			11	16	27		37
1CB-18-04	M18x1.5	G1/4"X19	12			11.5	12	19		29.5
1CB-18-06	M18x1.5	G3/8"X19	12			11.5	13.5	22		32
1CB-18-08	M18x1.5	G1/2"X14	12			11.5	16	27		36
1CB-18-12	M18x1.5	G3/4"X14	12			11.5	18.5	32		40
1CB-22-06	M22x1.5	G3/8"X19	15			12.5	13.5	22		33
1CB-22-08	M22x1.5	G1/2"X14	15			12.5	16	27		37
1CB-26-08	M26x1.5	G1/2"X14	18			12	16	27		37
1CB-26-12	M26x1.5	G3/4"X14	18			12	18.5	32		41.5
1CB-30-12	M30x2	G3/4"X14	22			14	18.5	32		42.5
1CB-36-16	M36x2	G1"X11	28			16	20.5	41		48.5
1CB-45-20	M45x2	G1.1/4"X11	35			18	20.5	50		55.5
1CB-52-24	M52x2	G1.1/2"X11	42			19	23	55		59

备注:如需带卡套及卡套螺母整套订货,则请在代号后加"RN",如"1CB-22-08RN"
Remark:In case if you are interested to order the adapter in complete set with cutting ring and nut,it is necessary to insert suffix"RN" arter our part NO.,for example 1CB-22-08RN.

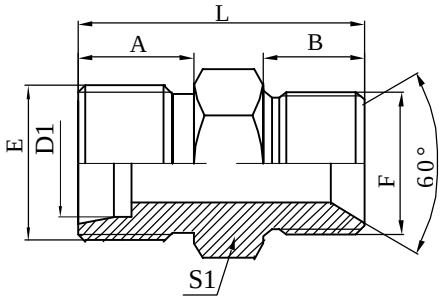

1DB

公制外螺纹24°重系列/英管螺纹
或60°锥面或组合垫密封
METRIC MALE 24°SEALH.T./BSP MALE
DOUBLE 60°SEAT BONDED SEAL

代号 PART NO.	螺纹 THREADE		管子外径 TUBE O.D.			尺 寸 DIMENSIONS				
	E	F	D1			A	B	S1		L
1DB-14-04	M14x1.5	G1/4"X19	6			12	12	19		30
1DB-16-04	M16x1.5	G1/4"X19	8			12	12	19		30
1DB-16-06	M16x1.5	G3/8"X19	8			12	13.5	22		33
1DB-18-04	M18x1.5	G1/4"X19	10			12	12	19		30
1DB-18-06	M18x1.5	G3/8"X19	10			12	13.5	22		33
1DB-18-08	M18x1.5	G1/2"X14	10			12	16	27		37
1DB-20-04	M20x1.5	G1/4"X19	12			12	12	22		31
1DB-20-06	M20x1.5	G3/8"X19	12			12	13.5	22		33
1DB-20-08	M20x1.5	G1/2"X14	12			12	16	27		37
1DB-22-08	M22x1.5	G1/2"X14	14			14	16	27		39
1DB-24-06	M24x1.5	G3/8"X19	16			14	13.5	27		36
1DB-24-08	M24x1.5	G1/2"X14	16			14	16	27		39
1DB-24-12	M24x1.5	G3/4"X14	16			14	18.5	32		42.5
1DB-30-12	M30x2	G3/4"X14	20			16	18.5	32		44.5
1DB-36-16	M36x2	G1"X11	25			18	20.5	41		50.5
1DB-42-20	M42x2	G1.1/4"X11	30			20	20.5	50		57.5
1DB-52-24	M52x2	G1.1/2"X11	38			22	23	55		62

备注:如需带卡套及卡套螺母整套订货,则请在代号后加"RN",如"1DB-22-08RN"
Remark:In case if you are interested to order the adapter in complete set with cutting ring and nut,it is necessary to insert suffix"RN" arter our part NO.,for example 1DB-22-08RN.

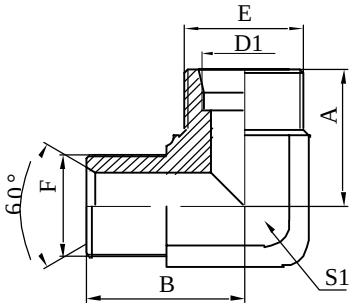

1CB9

90°公制外螺纹24°轻系列/
英管螺纹60°锥面密封
90°METRIC MALE 24°L.T.
/BSP MALE 60°CONE

代号 PART NO.	螺纹 THREADE		管子外径 TUBE O.D.			尺 寸 DIMENSIONS				
	E	F	D1			A	B	S1		
1CB9-12-04	M12x1.5	G1/4"X19	6			29	27	14		
1CB9-14-04	M14x1.5	G1/4"X19	8			29	27	14		
1CB9-14-06	M14x1.5	G3/8"X19	8			30	29	17		
1CB9-16-04	M16x1.5	G1/4"X19	10			30	29	17		
1CB9-16-06	M16x1.5	G3/8"X19	10			30	29	17		
1CB9-16-08	M16x1.5	G1/2"X14	10			37	37	22		
1CB9-18-04	M18x1.5	G1/4"X19	12			33	33	19		
1CB9-18-06	M18x1.5	G3/8"X19	12			33	33	19		
1CB9-18-08	M18x1.5	G1/2"X14	12			37	37	22		
1CB9-22-06	M22x1.5	G3/8"X19	15			37	37	22		
1CB9-22-08	M22x1.5	G1/2"X14	15			37	37	22		
1CB9-26-08	M26x1.5	G1/2"X14	18			41	41	27		
1CB9-30-12	M30x2	G3/4"X14	22			40	40	27		
1CB9-36-16	M36x2	G1"X11	28			46	46	33		
1CB9-45-20	M45x2	G1.1/4"X11	35			55	55	44		
1CB9-52-24	M52x2	G1.1/2"X11	42			61	57	55		

备注:如需带卡套及卡套螺母整套订货,则请在代号后加"RN",如"1CB9-22-08RN"
Remark:In case if you are interested to order the adapter in complete set with cutting ring and nut,it is necessary to insert suffix"RN" arter our part NO.,for example 1CB9-22-08RN.

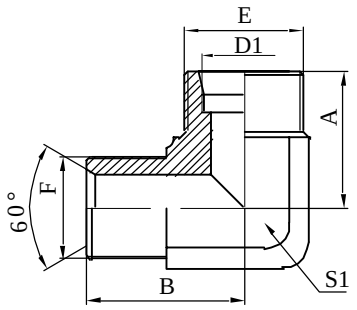

1DB9

90°公制外螺纹24°重系列/
英管螺纹60°锥面密封
90°METRIC MALE 24°H.T./
BSP MALE BSP MALE 60 °CONE

代号 PART NO.	螺纹 THREADE		管子外径 TUBE O.D.			尺 寸 DIMENSIONS				
	E	F	D1			A	B	S1		
1DB9-14-04	M14x1.5	G1/4"X19	6			29	27	14		
1DB9-16-04	M16x1.5	G1/4"X19	8			30	29	17		
1DB9-16-06	M16x1.5	G3/8"X19	8			30	29	17		
1DB9-18-04	M18x1.5	G1/4"X19	10			33	33	19		
1DB9-18-06	M18x1.5	G3/8"X19	10			33	33	19		
1DB9-18-08	M18x1.5	G1/2"X14	10			37	37	22		
1DB9-20-04	M20x1.5	G1/4"X19	12			37	37	22		
1DB9-20-06	M20x1.5	G3/8"X19	12			37	37	22		
1DB9-20-08	M20x1.5	G1/2"X14	12			37	37	22		
1DB9-22-08	M22x1.5	G1/2"X14	14			37	37	22		
1DB9-24-06	M24x1.5	G3/8"X19	16			37	33	24		
1DB9-24-08	M24x1.5	G1/2"X14	16			37	33	24		
1DB9-24-12	M24x1.5	G3/4"X14	16			41	41	27		
1DB9-30-12	M30x2	G3/4"X14	20			41	41	27		
1DB9-36-08	M36x2	G1/2"X14	25			49	49	33		
1DB9-36-12	M36x2	G3/4"X14	25			49	49	33		
1DB9-36-16	M36x2	G1"X11	25			49	49	33		
1DB9-42-20	M42x2	G1.1/4"X11	30			55	55	44		
1DB9-52-24	M52x2	G1.1/2"X11	38			61	57	55		

备注:如需带卡套及卡套螺母整套订货,则请在代号后加"RN",如"1DB9-22-08RN"
Remark:In case if you are interested to order the adapter in complete set with cutting ring and nut,it is necessary to insert suffix"RN" arter our part NO.,for example 1DB9-22-08RN.

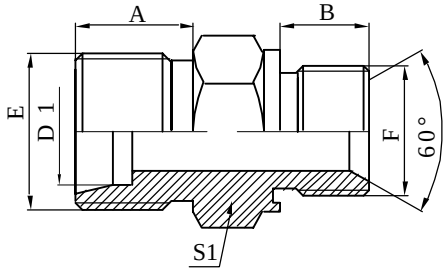

1CB-WD

公制外螺纹24°轻系列/英管螺纹
60 °内锥面或胶垫密封
METRIC MALE 24 °L.T./BSP THREAD
WITH CAPTIVE SEAL

代号 PART NO.	螺纹 THREADE		管子外径 TUBE O.D.			尺 寸 DIMENSIONS				
	E	F	D1			A	B	S1		
1CB-12-02WD	M12x1.5	G1/8"X28	6			10	10	12		
1CB-12-04WD	M12x1.5	G1/4"X19	6			10	12	19		
1CB-12-06WD	M12x1.5	G3/8"X19	6			10	13.5	22		
1CB-14-02WD	M14x1.5	G1/8"X28	8			11	10	14		
1CB-14-04WD	M14x1.5	G1/4"X19	8			11	12	19		
1CB-14-06WD	M14x1.5	G3/8"X19	8			11	13.5	22		
1CB-16-04WD	M16x1.5	G1/4"X19	10			11	12	19		
1CB-16-06WD	M16x1.5	G3/8"X19	10			11	13.5	22		
1CB-16-08WD	M16x1.5	G1/2"X14	10			11	16	27		
1CB-18-04WD	M18x1.5	G1/4"X19	12			11.5	12	19		
1CB-18-06WD	M18x1.5	G3/8"X19	12			11.5	13.5	22		
1CB-18-08WD	M18x1.5	G1/2"X14	12			11.5	16	27		
1CB-22-04WD	M22x1.5	G1/4"X19	15			12.5	12	22		
1CB-22-06WD	M22x1.5	G3/8"X19	15			12.5	13.5	22		
1CB-22-08WD	M22x1.5	G1/2"X14	15			12.5	16	27		
1CB-22-12WD	M22x1.5	G3/4"X14	15			12.5	18.5	32		
1CB-26-08WD	M26x1.5	G1/2"X14	18			12	16	27		
1CB-26-12WD	M26x1.5	G3/4"X14	18			12	18.5	32		
1CB-30-12WD	M30x2	G3/4"X14	22			14	18.5	32		
1CB-36-16WD	M36x2	G1"X11	28			16	20.5	41		
1CB-45-20WD	M45x2	G1.1/4"X11	35			18	20.5	50		
1CB-52-24WD	M52x2	G1.1/2"X11	42			19	23	55		

备注:如需带卡套及卡套螺母整套订货,则请在代号后加"RN",如"1CB-22-08WD/RN"
Remark:In case if you are interested to order the adapter in complete set with cutting ring and nut,it is necessary to insert suffix"RN" arter our part NO.,for example 1CB-22-08WD/RN.

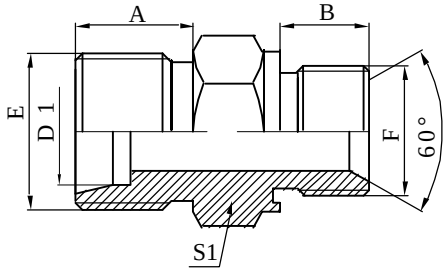

1DB-WD

公制外螺纹24°重系列/英管螺纹
60 °内锥面胶垫密封
METRIC MALE 24 °H.T./BSP THREAD
WITH CAPTIVE SEAL

代号 PART NO.	螺纹 THREADE		管子外径 TUBE O.D.			尺 寸 DIMENSIONS				
	E	F	D1			A	B	S1		
1DB-14-04WD	M14x1.5	G1/4"X19	6			12	12	19		
1DB-16-04WD	M16x1.5	G1/4"X19	8			12	12	19		
1DB-16-06WD	M16x1.5	G3/8"X19	8			12	13.5	22		
1DB-18-04WD	M18x1.5	G1/4"X19	10			12	12	19		
1DB-18-06WD	M18x1.5	G3/8"X19	10			12	13.5	22		
1DB-18-08WD	M18x1.5	G1/2"X14	10			12	16	27		
1DB-20-04WD	M20x1.5	G1/4"X19	12			12	12	22		
1DB-20-06WD	M20x1.5	G3/8"X19	12			12	13.5	22		
1DB-20-08WD	M20x1.5	G1/2"X14	12			12	16	27		
1DB-22-08WD	M22x1.5	G1/2"X14	14			14	16	27		
1DB-24-06WD	M24x1.5	G3/8"X19	16			14	13.5	27		
1DB-24-08WD	M24x1.5	G1/2"X14	16			14	16	27		
1DB-24-12WD	M24x1.5	G3/4"X14	16			14	18.5	32		
1DB-30-12WD	M30x2	G3/4"X14	20			16	18.5	32		
1DB-42-20WD	M42x2	G1.1/4"X11	30			20	20.5	50		
1DB-52-24WD	M52x2	G1.1/2"X11	38			22	23	55		

备注:如需带卡套及卡套螺母整套订货,则请在代号后加"RN",如"1DB-22-08RN"
Remark:In case if you are interested to order the adapter in complete set with cutting ring and nut,it is necessary to insert suffix"RN" arter our part NO.,for example 1DB-22-08RN.

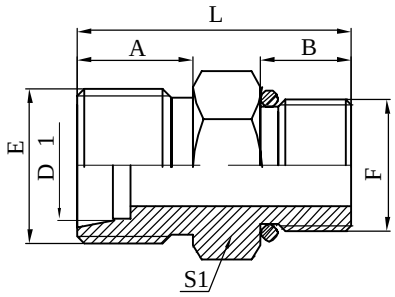

1CG

公制外螺纹24°轻系列/
英管外螺纹O型圈密封
METRIC MALE 24°L.T./
BSP MALE O-RING

代号 PART NO.	螺纹 THREADE		管子外径 TUBE O.D.			尺 寸 DIMENSIONS				
	E	F	D1			A	B	S1		L
1CG-12-02	M12x1.5	G1/8"X28	6			10	9	14		25
1CG-12-04	M12x1.5	G1/4"X19	6			10	12	14		28
1CG-14-04	M14x1.5	G1/4"X19	8			11	12	14		29
1CG-14-06	M14x1.5	G3/8"X19	8			11	13.5	22		32
1CG-14-08	M14x1.5	G1/2"X14	8			11	16	27		36
1CG-16-04	M16x1.5	G1/4"X19	10			11	12	19		29
1CG-16-06	M16x1.5	G3/8"X19	10			11	13.5	22		32
1CG-16-08	M16x1.5	G1/2"X14	10			11	16	27		36
1CG-18-06	M18x1.5	G3/8"X19	12			11.5	13.5	22		32
1CG-18-08	M18x1.5	G1/2"X14	12			11.5	16	27		36
1CG-22-06	M22x1.5	G3/8"X19	15			12.5	13.5	22		33
1CG-22-08	M22x1.5	G1/2"X14	15			12.5	16	27		37
1CG-22-12	M22x1.5	G3/4"X14	15			12.5	18.5	32		41
1CG-26-08	M26x1.5	G1/2"X14	18			12	16	27		37
1CG-26-12	M26x1.5	G3/4"X14	18			12	18.5	32		40.5
1CG-30-12	M30x2	G3/4"X14	22			14	18.5	32		42.5
1CG-30-16	M30x2	G1"X11	22			14	20.5	41		46.5
1CG-36-16	M36x2	G1"X11	28			16	20.5	41		48.5
1CG-45-20	M45x2	G1.1/4"X11	35			18	20.5	50		55
1CG-52-20	M52x2	G1.1/4"X11	42			19	20.5	55		56.5
1CG-52-24	M52x2	G1.1/2"X11	42			19	23	55		59
1CG-52-32	M52x2	G2"	42			19	25.5	70		62.5

备注:如需带卡套及卡套螺母整套订货,则请在代号后加"RN",如"1CG-22-08RN"
Remark:In case if you are interested to order the adapter in complete set with cutting ring and nut,it is necessary to insert suffix"RN" arter our part NO.,for example 1CG-22-08RN.

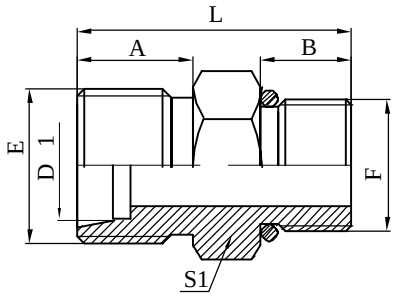

1DG

公制外螺纹24°重系列/
英管外螺纹O型圈密封
METRIC MALE 24°H.T./
BSP MALE O-RING

代号 PART NO.	螺纹 THREADE		管子外径 TUBE O.D.			尺 寸 DIMENSIONS				
	E	F	D1			A	B	S1		L
1DG-14-04	M14x1.5	G1/4"X19	6			12	12	19		30
1DG-16-04	M16x1.5	G1/4"X19	8			12	12	19		30
1DG-18-04	M18x1.5	G1/4"X19	10			12	12	19		30
1DG-18-06	M18x1.5	G3/8"X19	10			12	13.5	22		33
1DG-20-06	M20x1.5	G3/8"X19	12			12	13.5	22		33
1DG-20-08	M20x1.5	G1/2"X14	12			12	16	27		37
1DG-22-06	M22x1.5	G3/8"X19	14			14	13.5	24		35
1DG-22-08	M22x1.5	G1/2"X14	14			14	16	27		39
1DG-24-08	M24x1.5	G1/2"X14	16			14	16	27		39
1DG-30-12	M30x2	G3/4"X14	20			16	18.5	32		44.5
1DG-36-16	M36x2	G1"X11	25			18	20.5	41		51.5
1DG-42-16	M42x2	G1"X11	30			20	20.5	46		53.5
1DG-42-20	M42x2	G1.1/4"X11	30			20	20.5	50		57.5
1DG-52-24	M52x2	G1.1/2"X11	38			22	23	55		62

备注:如需带卡套及卡套螺母整套订货,则请在代号后加"RN",如"1DG-22-08RN"
Remark:In case if you are interested to order the adapter in complete set with cutting ring and nut,it is necessary to insert suffix"RN" arter our part NO.,for example 1DG-22-08RN.

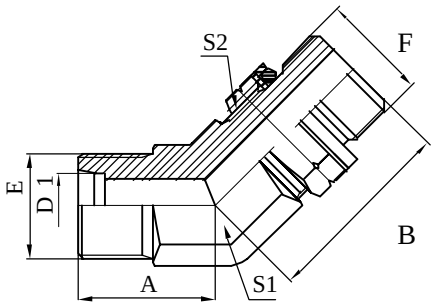

1CG4-OG

45°英管螺纹24°轻系列可调向柱端
45°BSP THREAD 24°L.T.ADJUSTABLE STUD.

代号 PART NO.	螺纹 THREADE		管子外径 TUBE O.D.			尺 寸 DIMENSIONS				
	E	F	D1			A	B	S1	S2	
1CG4-12-02OG	M12x1.5	G1/8"X28	6			20	24	11	14	
1CG4-14-04OG	M14x1.5	G1/4"X19	8			22	27	14	19	
1CG4-16-04OG	M16x1.5	G1/4"X19	10			22	27	17	19	
1CG4-16-06OG	M16x1.5	G3/8"X19	10			22	30	17	22	
1CG4-18-06OG	M18x1.5	G3/8"X19	12			24	31	19	22	
1CG4-22-08OG	M22x1.5	G1/2"X14	15			27	36	22	27	
1CG4-26-08OG	M26x1.5	G1/2"X14	18			33	37.5	27	27	
1CG4-26-12OG	M26x1.5	G3/4"X14	18			33	42	27	32	
1CG4-30-12OG	M30x2	G3/4"X14	22			33	42.5	27	32	
1CG4-36-16OG	M36x2	G1"X11	28			37	44.5	33	41	
1CG4-45-20OG	M45x2	G1.1/4"X11	35			41	50.5	44	50	

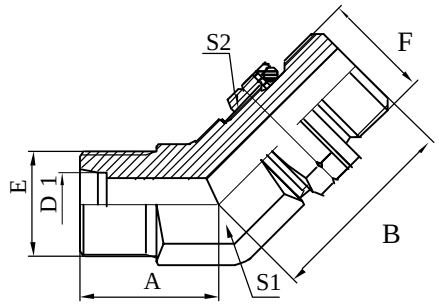

1DG4-OG

45°英管螺纹24°重系列可调向柱端
45°BSP THREAD 24°H.T.ADJUSTABLE STUD.

代号 PART NO.	螺纹 THREADE		管子外径 TUBE O.D.			尺 寸 DIMENSIONS				
	E	F	D1			A	B	S1	S2	
1DG4-14-04OG	M14x1.5	G1/4"X19	6			22	27	14	19	
1DG4-16-04OG	M16x1.5	G1/4"X19	8			22	27	17	19	
1DG4-18-06OG	M18x1.5	G3/8"X19	10			24	31	19	22	
1DG4-20-06OG	M20x1.5	G3/8"X19	12			27	31	22	22	
1DG4-22-08OG	M22x1.5	G1/2"X14	14			27	36	22	27	
1DG4-30-12OG	M30x2	G3/4"X14	20			33	42.5	27	32	
1DG4-36-16OG	M36x2	G1"X11	25			37	44.5	33	41	
1DG4-42-20OG	M42x2	G1.1/4"X11	30			41	47.5	44	50	

备注:如需带卡套及卡套螺母整套订货,则请在代号后加"RN",如"1DG4-22-08OG/RN"(同上)
Remark:In case if you are interested to order the adapter in complete set with cutting ring and nut,it is necessary to insert suffix"RN" arter our part NO.,for example 1DG4-22-08OG/RN. (the same with above)

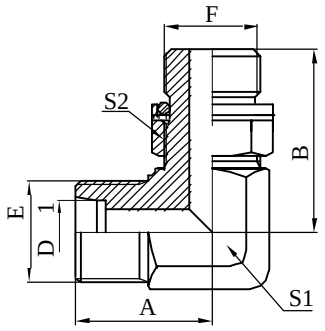

1CG9-OG

90°英管螺纹24°轻系列可调向柱端
90°BSP THREAD 24°L.T.ADJUSTABLE STUD

代号 PART NO.	螺纹 THREADE		管子外径 TUBE O.D.			尺 寸 DIMENSIONS				
	E	F	D1			A	B	S1	S2	
1CG9-12-02OG	M12x1.5	G1/8"X28	6			25	26.2	11	14	
1CG9-14-04OG	M14x1.5	G1/4"X19	8			29	31.3	14	19	
1CG9-16-04OG	M16x1.5	G1/4"X19	10			30	32.5	17	19	
1CG9-16-06OG	M16x1.5	G3/8"X19	10			30	35.8	17	22	
1CG9-18-06OG	M18x1.5	G3/8"X19	12			33	36.8	19	22	
1CG9-22-08OG	M22x1.5	G1/2"X14	15			37	43.2	22	27	
1CG9-26-08OG	M26x1.5	G1/2"X14	18			41	46	27	27	
1CG9-30-12OG	M30x2	G3/4"X14	22			40	52	27	32	
1CG9-36-16OG	M36x2	G1"X11	28			46	56	33	41	
1CG9-45-20OG	M45x2	G1.1/4"X11	35			55	63	44	50	
1CG9-52-24OG	M52x2	G1.1/2"X11	42			59	68.5	55	55	

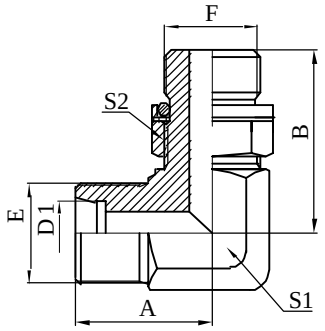

1DG9-OG

90°英管螺纹24°重系列可调向柱端
90°BSP THREAD 24°H.T.ADJUSTABLE STUD

代号 PART NO.	螺纹 THREADE		管子外径 TUBE O.D.			尺 寸 DIMENSIONS				
	E	F	D1			A	B	S1	S2	
1DG9-14-04OG	M14x1.5	G1/4"X19	6			29	31.3	14	19	
1DG9-16-04OG	M16x1.5	G1/4"X19	8			30	32.5	17	19	
1DG9-18-06OG	M18x1.5	G3/8"X19	10			33	36.8	19	22	
1DG9-20-06OG	M20x1.5	G3/8"X19	12			37	36.8	22	22	
1DG9-22-08OG	M22x1.5	G1/2"X14	14			37	43.2	22	27	
1DG9-30-12OG	M30x2	G3/4"X14	20			40	52	27	32	
1DG9-36-16OG	M36x2	G1"X11	25			46	56	33	41	
1DG9-42-20OG	M42x2	G1.1/4"X11	30			55	58	44	50	

备注:如需带卡套及卡套螺母整套订货,则请在代号后加"RN",如"1DG9-22-08OG/RN"(同上)
Remark:In case if you are interested to order the adapter in complete set with cutting ring and nut,it is necessary to insert suffix"RN" arter our part NO.,for example 1DG9-22-08OG/RN. (the same with above)

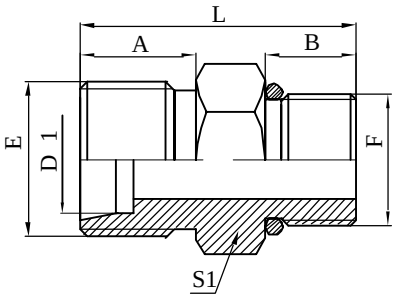

1CH

公制外螺纹24°轻系列/
六角端面O型圈密封
METRIC MALE 24°L.T./
METRIC MALE WITH O-RING

代号 PART NO.	螺纹 THREADE		管子外径 TUBE O.D.			尺 寸 DIMENSIONS				
	E	F	D1			A	B	S1		L
1CH-12-10	M12x1.5	M10x1	6			10	8.5	12		24.5
1CH-14	M14x1.5	M14x1.5	8			11	11	19		28
1CH-14-12	M14x1.5	M12x1.5	8			11	11	17		28
1CH-16-14	M16x1.5	M14x1.5	10			11	11	19		28
1CH-18-14	M18x1.5	M14x1.5	12			11.5	11	19		28.5
1CH-14-18	M14x1.5	M18x1.5	8			11	11	24		30
1CH-16	M16x1.5	M16x1.5	10			11	11	22		29
1CH-16-18	M16x1.5	M18x1.5	10			11	11	24		30
1CH-18-16	M18x1.5	M16x1.5	12			11.5	11	22		30
1CH-22-16	M22x1.5	M16x1.5	12			12.5	11	24		31
1CH-22-18	M22x1.5	M18x1.5	15			12.5	11	24		31
1CH-16-22	M16x1.5	M22x1.5	10			11	12	27		32
1CH-22-20	M22x1.5	M20x1.5	15			12.5	12	27		33
1CH-22	M22x1.5	M22x1.5	12			12.5	12	27		33
1CH-26-22	M26x1.5	M22x1.5	18			12	12	27		33
1CH-26	M26x1.5	M26x1.5	18			12	13	32		35
1CH-26-27	M26x1.5	M27x2	18			12	13	32		35
1CH-30-22	M30x2	M22x1.5	22			14	12	32		36
1CH-30-27	M30x2	M27x2	22			14	13	32		37
1CH-30	M30x2	M30x2	22			14	14	36		39
1CH-36-27	M36x2	M27x2	28			16	13	36		40

备注:如需带卡套及卡套螺母整套订货,则请在代号后加"RN",如"1CH-22-08RN"
Remark:In case if you are interested to order the adapter in complete set with cutting ring and nut,it is necessary to insert suffix"RN" arter our part NO.,for example 1CH-22-08RN.

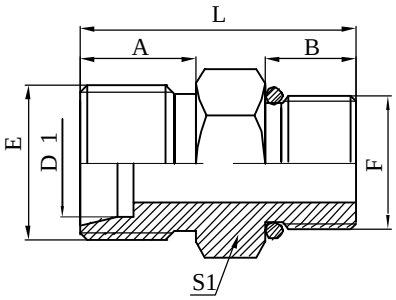

1DH

公制外螺纹24°重系列/
外螺纹六角端面O型圈密封
METRIC MALE 24°H.T./
METRIC MALE WITH O-RING

代号 PART NO.	螺纹 THREADE		管子外径 TUBE O.D.			尺 寸 DIMENSIONS				
	E	F	D1			A	B	S1		L
1DH-14	M14x1.5	M14x1.5	6			12	11	19		29
1DH-14-12	M14x1.5	M12x1.5	6			12	11	17		29
1DH-16-14	M16x1.5	M14x1.5	8			12	11	19		29
1DH-18-16	M18x1.5	M16x1.5	10			12	11	22		30
1DH-20-14	M20x1.5	M14x1.5	12			12	11	22		30
1DH-20-16	M20x1.5	M16x1.5	12			12	11	22		30
1DH-20-18	M20x1.5	M18x1.5	12			12	11	24		31
1DH-20-22	M20x1.5	M22x1.5	12			12	12	27		33
1DH-24-22	M24x1.5	M22x1.5	16			14	12	27		35
1DH-30	M30x2	M30x2	20			16	14	36		41
1DH-30-27	M30x2	M27x2	20			16	13	32		39
1DH-36-27	M36x2	M27x2	25			18	13	36		42

备注:如需带卡套及卡套螺母整套订货,则请在代号后加"RN",如"1DH-22-08RN"
Remark:In case if you are interested to order the adapter in complete set with cutting ring and nut,it is necessary to insert suffix"RN" arter our part NO.,for example 1DH-22-08RN.

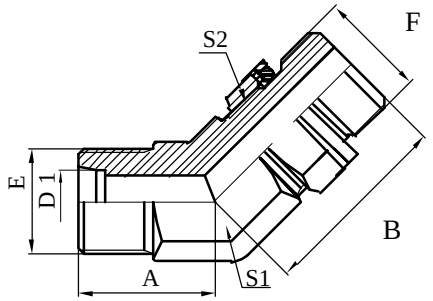

1CH4-OG

45°公制外螺纹24°轻系列可调向柱端
45°METRIC MALE 24°L.T.ADJUSTABLE STUD

代号 PART NO.	螺纹 THREADE		管子外径 TUBE O.D.			尺 寸 DIMENSIONS				
	E	F	D1			A	B	S1	S2	
1CH4-12-10OG	M12x1.5	M10x1	6			20	25.5	11	14	
1CH4-14-12OG	M14x1.5	M12x1.5	8			22	30	14	17	
1CH4-16-14OG	M16x1.5	M14x1.5	10			22	30.5	17	19	
1CH4-18-16OG	M18x1.5	M16x1.5	12			24	34	19	22	
1CH4-22-18OG	M22x1.5	M18x1.5	15			27	38	22	24	
1CH4-26-22OG	M26x1.5	M22x1.5	18			33	40.5	27	27	
1CH4-30-27OG	M30x2	M27x2	25			33	48	27	32	
1CH4-36-33OG	M36x2	M33x2	28			37	49.5	33	41	
1CH4-45-42OG	M45x2	M42x2	35			41	55	44	50	

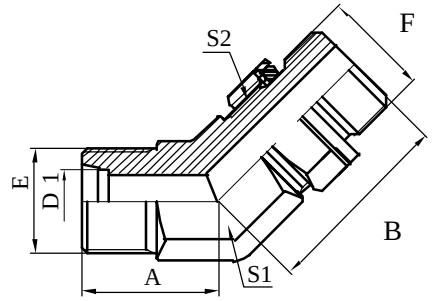

1DH4-OG

45°公制外螺纹24°重系列可调向柱端
45°METRIC MALE 24°H.T.ADJUSTABLE STUD

代号 PART NO.	螺纹 THREADE		管子外径 TUBE O.D.			尺 寸 DIMENSIONS				
	E	F	D1			A	B	S1	S2	
1DH4-14-12OG	M14x1.5	M12x1.5	6			22	30	14	17	
1DH4-16-14OG	M16x1.5	M14x1.5	8			22	30.5	17	19	
1DH4-18-16OG	M18x1.5	M16x1.5	10			24	34	19	22	
1DH4-20-18OG	M20x1.5	M18x1.5	12			27	37	22	24	
1DH4-24-22OG	M24x1.5	M22x1.5	16			33	40	27	27	
1DH4-30-27OG	M30x2	M27x2	20			33	48	27	32	
1DH4-36-33OG	M36x2	M33x2	25			37	49.5	33	41	
1DH4-42-42OG	M42x2	M42x2	30			41	54	44	50	

备注:如需带卡套及卡套螺母整套订货,则请在代号后加"RN",如"1DH4-24-22OG/RN"(同上)
Remark:In case if you are interested to order the adapter in complete set with cutting ring and nut,it is necessary to insert suffix"RN" arter our part NO.,for example 1DH4-24-22OG/RN. (the same with above)

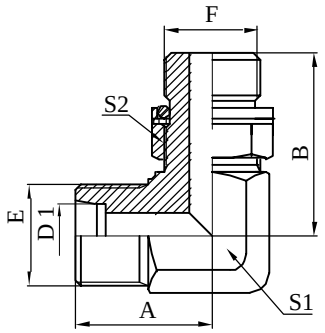

1CH9-OG

90°公制外螺纹24°轻系列可调向柱端
90°METRIC MALE 24°L.T. ADJUSTABLE STUD

代号 PART NO.	螺纹 THREADE		管子外径 TUBE O.D.			尺 寸 DIMENSIONS				
	E	F	D1			A	B	S1	S2	
1CH9-12-	M12x1.5	M10x1	6			25	26.5	11	14	
10OG	M14x1.5	M12x1.5	8			29	32	14	17	
1CH9-14-12OG	M16x1.5	M14x1.5	10			30	34	17	19	
1CH9-16-14OG	M18x1.5	M16x1.5	12			33	36	19	22	
1CH9-18-16OG	M22x1.5	M18x1.5	15			37	39.5	22	24	
1CH9-22-18OG	M26x1.5	M22x1.5	18			41	43.5	27	27	
1CH9-26-22OG	M30x2	M27x2	25			40	50	27	32	
1CH9-30-27OG	M36x2	M33x2	28			46	54	33	41	
1CH9-36-33OG										

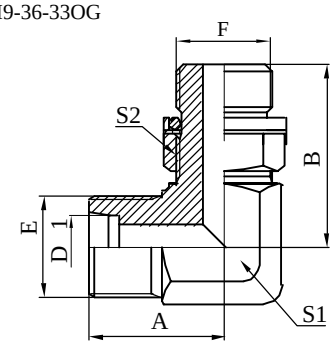

1DH9-OG

90°公制外螺纹24°重系列可调向柱端
90°METRIC MALE 24°H.T. ADJUSTABLE STUD

代号 PART NO.	螺纹 THREADE		管子外径 TUBE O.D.			尺 寸 DIMENSIONS				
	E	F	D1			A	B	S1	S2	
1DH9-14-12OG	M14x1.5	M12x1.5	6			29	32	14	17	
1DH9-16-14OG	M16x1.5	M14x1.5	8			30	34	17	19	
1DH9-18-16OG	M18x1.5	M16x1.5	10			33	36	19	22	
1DH9-20-18OG	M20x1.5	M18x1.5	12			37	37	22	24	
1DH9-22-20OG	M22x1.5	M20x1.5	14			37	40	22	27	
1DH9-24-22OG	M24x1.5	M22x1.5	16			37	37.5	24	27	
1DH9-30-27OG	M30x2	M27x2	20			41	50	27	32	
1DH9-36-33OG	M36x2	M33x2	25			46	54	33	41	
1DH9-42OG	M42x2	M42x2	30			55	57.2	44	50	

备注:如需带卡套及卡套螺母整套订货,则请在代号后加"RN",如"1CB-22-08RN"(同上)
Remark:In case if you are interested to order the adapter in complete set with cutting ring and nut,it is necessary to insert suffix"RN" arter our part NO.,for example 1CB-22-08RN. (the same with above)

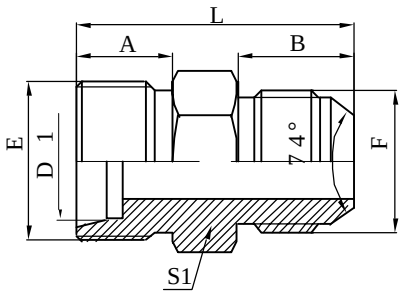

1CJ

公制外螺纹24°轻系列
/美制JIC74°锥密封
METRIC MALE 24°L.T./
JIC 74 °CONE SEAL

代号 PART NO.	螺纹 THREADE		管子外径 TUBE O.D.			尺 寸 DIMENSIONS				
	E	F	D1			A	B	S1		L
1CJ-12-04	M12x1.5	U7/16"X20	6			10	14	14		30
1CJ-14-04	M14x1.5	U7/16"X20	8			11	14	14		31
1CJ-14-06	M14x1.5	U9/16"X18	8			11	14	17		31
1CJ-16-06	M16x1.5	U9/16"X18	10			11	14	17		31
1CJ-18-06	M18x1.5	U9/16"X18	12			11.5	14	19		31.5
1CJ-18-08	M18x1.5	U3/4"X16	12			11.5	16.7	22		35
1CJ-22-08	M22x1.5	U3/4"X16	15			12.5	16.7	24		37
1CJ-22-10	M22x1.5	U7/8"X14	15			12.5	19.5	24		40
1CJ-26-10	M26x1.5	U7/8"X14	18			12	19.5	27		40
1CJ-26-12	M26x1.5	U1.1/16"X12	18			12	19.5	30		41.5
1CJ-30-12	M30x2	U1.1/16"X12	22			14	22	32		46
1CJ-36-16	M36x2	U1.5/16"X12	28			16	23	36		50
1CJ-45-20	M45x2	U1.5/8"X12	35			18	24.5	46		55.5
1CJ-52-20	M52x2	U1.5/8"X12	42			19	24.5	55		60.5
1CJ-52-24	M52x2	U1.7/8"X12	42			19	27.5	55		63.5

备注:如需带卡套及卡套螺母整套订货,则请在代号后加"RN",如"1CJ-22-08RN"
Remark:In case if you are interested to order the adapter in complete set with cutting ring and nut,it is necessary to insert suffix"RN" arter our part NO.,for example 1CJ-22-08RN.

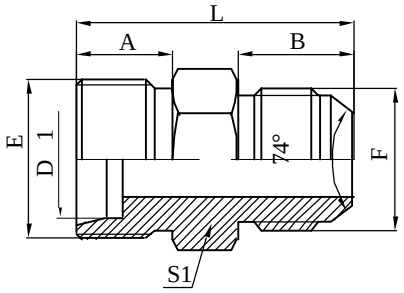

1DJ

公制外螺纹24°重系列
/美制JIC74°锥密封
METRIC MALE 24°H.T./
JIC 74°CONE SEAL

代号 PART NO.	螺纹 THREADE		管子外径 TUBE O.D.			尺 寸 DIMENSIONS				
	E	F	D1			A	B	S1		L
1DJ-14-04	M14x1.5	U7/16"X20	6			12	14	14		32
1DJ-16-04	M16x1.5	U7/16"X20	8			12	14	17		32
1DJ-16-06	M16x1.5	U9/16"X18	8			12	14	17		32
1DJ-18-04	M18x1.5	U7/16"X20	10			12	14	19		32
1DJ-18-06	M18x1.5	U9/16"X18	10			12	14	19		32
1DJ-20-06	M20x1.5	U9/16"X18	12			12	14	22		33
1DJ-20-08	M20x1.5	U3/4"X16	12			12	16.7	22		36
1DJ-22-08	M22x1.5	U3/4"X16	14			14	16.7	24		38
1DJ-24-08	M24x1.5	U3/4"X16	16			14	16.7	27		39
1DJ-24-10	M24x1.5	U7/8"X14	16			14	19.5	30		42.5
1DJ-30-12	M30x2	U1.1/16"X12	20			16	22	32		48
1DJ-36-16	M36x2	U1.5/16"X12	25			18	23	32		52
1DJ-42-20	M42x2	U1.5/8"X12	30			20	24.5	46		57.5
1DJ-52-24	M52x2	U1.7/8"X12	38			22	27.5	55		66.5

备注:如需带卡套及卡套螺母整套订货,则请在代号后加"RN",如"1DJ-22-08RN"
Remark:In case if you are interested to order the adapter in complete set with cutting ring and nut,it is necessary to insert suffix"RN" arter our part NO.,for example 1DJ-22-08RN.

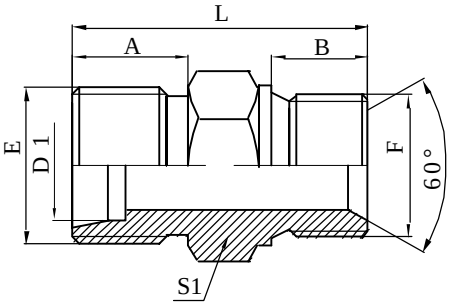

1CM

公制外螺纹24°轻系列
/60 °内锥面或组合垫密封
METRIC MALE 24 °L.T.
/60 °CONE BONDED SEAL

代号 PART NO.	螺纹 THREADE		管子外径 TUBE O.D.			尺 寸 DIMENSIONS				
	E	F	D1			A	B	S1		L
1CM-14-12	M14x1.5	M12x1.5	8			11	10	17		29
1CM-14-18	M14x1.5	M18x1.5	8			11	12	24		33
1CM-16-14	M16x1.5	M14x1.5	10			11	11	19		30
1CM-16-16	M16x1.5	M16x1.5	10			11	12	22		32
1CM-16-18	M16x1.5	M18x1.5	10			11	12	24		33
1CM-16-22	M16x1.5	M22x1.5	10			11	14	27		36
1CM-18-14	M18x1.5	M14x1.5	12			11.5	11	19		30.5
1CM-18-16	M18x1.5	M16x1.5	12			11.5	12	22		33
1CM-18-18	M18x1.5	M18x1.5	12			11.5	12	24		33
1CM-18-22	M18x1.5	M22x1.5	12			11.5	14	27		36
1CM-22-16	M22x1.5	M16x1.5	15			12.5	12	22		34
1CM-22-18	M22x1.5	M18x1.5	15			12.5	12	24		34
1CM-22	M22x1.5	M22x1.5	15			12.5	14	27		37
1CM-26-18	M26x1.5	M18x1.5	18			12	12	24		34
1CM-26-22	M26x1.5	M22x1.5	18			12	14	27		37
1CM-30-22	M30x2	M22x1.5	22			14	14	30		39
1CM-36-33	M36x2	M33x2	28			16	18	41		49

备注:如需带卡套及卡套螺母整套订货,则请在代号后加"RN",如"1CM-18-16RN"
Remark:In case if you are interested to order the adapter in complete set with cutting ring and nut,it is necessary to insert suffix"RN" arter our part NO.,for example 1CM-18-16RN.

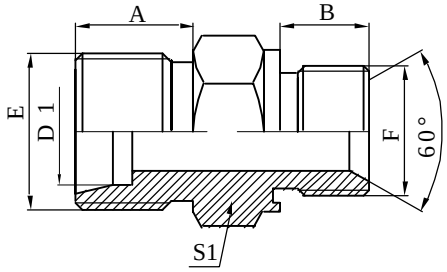

1CM-WD

公制外螺纹24°轻系列
/60°内锥面或胶垫密封
METRIC MALE 24 °L.T./
60°CONE CAPTIVE SEAL

代号 PART NO.	螺纹 THREADE		管子外径 TUBE O.D.			尺 寸 DIMENSIONS				
	E	F	D1			A	B	S1		
1CM-14-12WD	M14x1.5	M12x1.5	8			11	10	17		
1CM-16-12WD	M16x1.5	M12x1.5	10			11	10	17		
1CM-16-14WD	M16x1.5	M14x1.5	10			11	11	19		
1CM-16-18WD	M16x1.5	M18x1.5	10			11	12	24		
1CM-18-16WD	M18x1.5	M16x1.5	12			11.5	12	22		
1CM-18WD	M18x1.5	M18x1.5	12			11.5	12	24		
1CM-18-22WD	M18x1.5	M22x1.5	12			11.5	14	27		
1CM-22-18WD	M22x1.5	M18x1.5	15			12.5	12	24		
1CM-22WD	M22x1.5	M22x1.5	15			12.5	14	27		
1CM-26-22WD	M26x1.5	M22x1.5	18			12	14	27		

备注:如需带卡套及卡套螺母整套订货,则请在代号后加"RN",如"1CM-18-16WD/RN"
Remark:In case if you are interested to order the adapter in complete set with cutting ring and nut,it is necessary to insert suffix"RN" arter our part NO.,for example 1CM-18-16WD/RN.

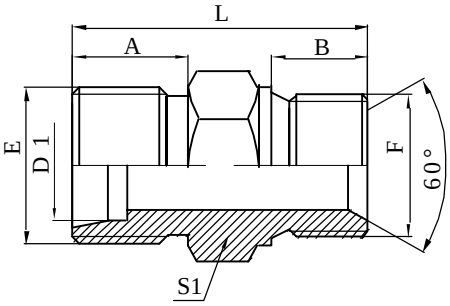

1DM

公制外螺纹24°重系列
/60°内锥面或组合垫密封
METRIC MALE 24 °H.T./
60°CONE BONDED SEAL

代号 PART NO.	螺纹 THREADE		管子外径 TUBE O.D.			尺 寸 DIMENSIONS				
	E	F	D1			A	B	S1		L
1DM-14-12	M14x1.5	M12x1.5	6			12	10	17		30
1DM-16-14	M16x1.5	M14x1.5	8			12	11	19		31
1DM-18-16	M18x1.5	M16x1.5	10			12	12	22		33
1DM-20-18	M20x1.5	M18x1.5	12			12	12	24		34
1DM-20-22	M20x1.5	M22x1.5	12			12	14	27		37
1DM-24-18	M24x1.5	M18x1.5	16			14	12	27		37
1DM-24-22	M24x1.5	M22x1.5	16			14	14	27		39

备注:如需带卡套及卡套螺母整套订货,则请在代号后加"RN",如"1DM-20-22RN"
Remark:In case if you are interested to order the adapter in complete set with cutting ring and nut,it is necessary to insert suffix"RN" arter our part NO.,for example 1DM-20-22RN.

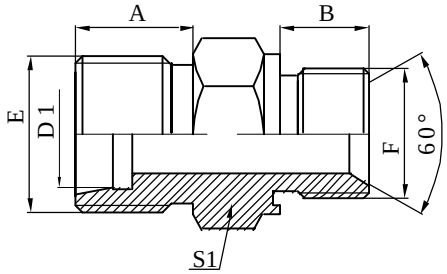

1DM-WD

公制外螺纹24°重系列
/60°内锥面或胶垫密封
METRIC MALE 24°H.T./
60°CONE CAPTIVE SEAL

代号 PART NO.	螺纹 THREADE		管子外径 TUBE O.D.			尺 寸 DIMENSIONS				
	E	F	D1			A	B	S1		
1DM-14-12WD	M14x1.5	M12x1.5	6			12	10	17		
1DM-16-14WD	M16x1.5	M14x1.5	8			12	11	19		
1DM-18-16WD	M18x1.5	M16x1.5	10			12	12	22		
1DM-20-18WD	M20x1.5	M18x1.5	12			12	12	24		
1DM-24-22WD	M24x1.5	M22x1.5	14			14	14	27		

备注:如需带卡套及卡套螺母整套订货,则请在代号后加"RN",如"1DM-20-18WD/RN"
Remark:In case if you are interested to order the adapter in complete set with cutting ring and nut,it is necessary to insert suffix"RN" arter our part NO.,for example 1DM-20-18WD/RN.

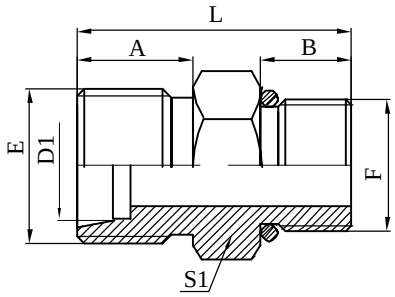

1CO

公制外螺纹24°轻系列
/美制外螺纹O型圈密封
METRIC MALE 24 °L.T./
SAE MALE O-RING

代号 PART NO.	螺纹 THREADE		管子外径 TUBE O.D.			尺 寸 DIMENSIONS				
	E	F	D1			A	B	S1		L
1CO-14-04	M14x1.5	U7/16"X20	8			11	10	14		27
1CO-16-04	M16x1.5	U7/16"X20	10			11	10	17		27
1CO-18-06	M18x1.5	U9/16"X18	12			11.5	12	19		29.5
1CO-18-08	M18x1.5	U3/4"X16	12			11.5	12	24		31
1CO-18-10	M18x1.5	U7/8"X14	12			11.5	13.5	27		34
1CO-22-08	M22x1.5	U3/4"X16	15			12.5	12	24		32
1CO-22-10	M22x1.5	U7/8"X14	15			12.5	13.5	27		35
1CO-22-12	M22x1.5	U1.1/16"X12	15			12.5	16	32		38.5
1CO-26-08	M26x1.5	U3/4"X16	18			12	12	27		33
1CO-26-10	M26x1.5	U7/8"X14	18			12	13.5	27		34
1CO-30-08	M30x2	U3/4"X16	22			14	12	32		36
1CO-30-10	M30x2	U7/8"X14	22			14	13.5	32		37.5
1CO-30-12	M30x2	U1.1/16"X12	22			14	16	32		40
1CO-30-16	M30x2	U1.5/16"X12	22			14	17	41		43
1CO-36-16	M36x2	U1.5/16"X12	28			16	17	41		45
1CO-45-16	M45x2	U1.5/16"X12	35			18	17	46		48
1CO-45-20	M45x2	U1.5/8"X12	35			18	18	50		53
1CO-52-20	M45x2	U1.5/8"X12	42			19	18	55		54

备注:如需带卡套及卡套螺母整套订货,则请在代号后加"RN",如"1CO-22-08RN"
Remark:In case if you are interested to order the adapter in complete set with cutting ring and nut,it is necessary to insert suffix"RN" arter our part NO.,for example 1CO-22-08RN.

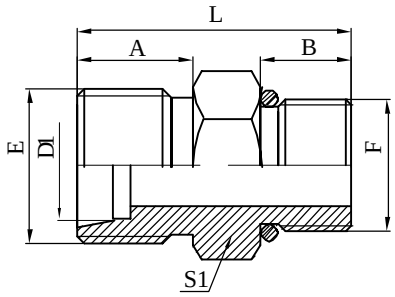

1DO

公制外螺纹24°重系列
/美制外螺纹O型圈密封
METRIC MALE 24 °H.T./
SAE MALE O-RING

代号 PART NO.	螺纹 THREADE		管子外径 TUBE O.D.			尺 寸 DIMENSIONS				
	E	F	D1			A	B	S1		L
1DO-16-04	M16x1.5	U7/16"X20	8			12	10	17		28
1DO-18-06	M18x1.5	U9/16"X18	10			12	12	19		30
1DO-20-06	M20x1.5	U9/16"X18	12			12	12	22		31
1DO-20-08	M20x1.5	U3/4"X16	12			12	12	24		32
1DO-24-08	M24x1.5	U3/4"X16	16			14	12	24		34
1DO-24-10	M24x1.5	U7/8"X14	16			14	13.5	27		36
1DO-30-08	M30x2	U3/4"X16	20			16	12	32		38
1DO-30-10	M30x2	U7/8"X14	20			16	13.5	32		39.5
1DO-30-12	M30x2	U1.1/16"X12	20			16	16	32		42
1DO-36-16	M36x2	U1.5/16"X12	25			18	17	41		47
1DO-42-16	M42x2	U1.5/16"X12	30			20	17	46		50
1DO-42-20	M42x2	U1.5/8"X12	30			20	18	50		55
1DO-52-20	M52x2	U1.5/8"X12	38			22	18	55		57

备注:如需带卡套及卡套螺母整套订货,则请在代号后加"RN",如"1DO-24-08RN"
Remark:In case if you are interested to order the adapter in complete set with cutting ring and nut,it is necessary to insert suffix"RN" arter our part NO.,for example 1DO-24-08RN.

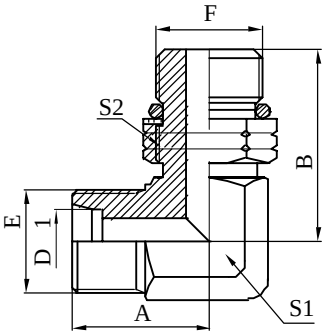

1CO9-OG

90°公制外螺纹24°轻系列
/美制外螺纹可调向柱端
90°METRIC 24°L.T.
/SAE MALE ADJUSTABLE STUD

代号 PART NO.	螺纹 THREADE		管子外径 TUBE O.D.			尺 寸 DIMENSIONS				
	E	F	D1			A	B	S1	S2	
1CO9-12-04OG	M12x1.5	U7/16"X20	6			25	27.2	11	17	
1CO9-14-06OG	M14x1.5	U9/16"X18	8			29	31.8	14	19	
1CO9-16-06OG	M16x1.5	U9/16"X18	10			30	33.3	17	19	
1CO9-18-08OG	M18x1.5	U3/4"X16	12			33	37.5	19	24	
1CO9-22-08OG	M22x1.5	U3/4"X16	15			37	44	22	27	
1CO9-22-10OG	M22x1.5	U7/8"X14	15			37	39.5	22	24	
1CO9-26-12OG	M26x1.5	U1.1/16"X12	18			41	51	27	32	
1CO9-30-12OG	M30x2	U1.1/16"X12	22			41	53.5	27	32	
1CO9-36-16OG	M36x2	U1.5/16"X12	28			49	57.5	33	41	
1CO9-45-20OG	M45x2	U1.5/8"X12	35			55	63	44	50	
1CO9-52-24OG	M52x2	U1.7/8"X12	42			59	70.5	55	55	

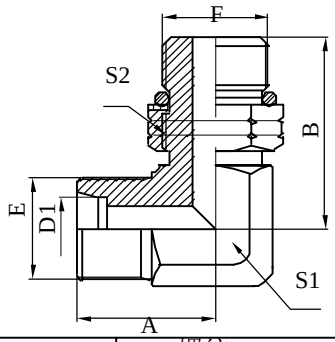

1DO9-OG

90°公制外螺纹24°重系列
/美制外螺纹可调向柱端
90°METRIC 24°H.T.
/SAE MALE ADJUSTABLE STUD

代号 PART NO.	螺纹 THREADE		管子外径 TUBE O.D.			尺 寸 DIMENSIONS				
	E	F	D1			A	B	S1	S2	
1DO9-14-04OG	M14x1.5	U7/16"X20	6			29	30	14	17	
1DO9-16-06OG	M16x1.5	U9/16"X18	8			30	33.3	17	19	
1DO9-18-06OG	M18x1.5	U9/16"X18	10			33	33.5	19	19	
1DO9-20-08OG	M20x1.5	U3/4"X16	12			37	37.5	22	24	
1DO9-24-10OG	M24x1.5	U7/8"X14	16			37	46.5	24	27	
1DO9-30-12OG	M30x2	U1.1/16"X12	20			41	53.5	27	32	
1DO9-36-16OG	M36x2	U1.5/16"X12	25			49	57.5	33	41	
1DO9-42-20OG	M42x2	U1.5/8"X12	30			57	59.5	44	50	

备注:如需带卡套及卡套螺母整套订货,则请在代号后加"RN",如"1DO9-20-08RN"(同上)
Remark:In case if you are interested to order the adapter in complete set with cutting ring and nut,it is necessary to insert suffix"RN" arter our part NO.,for example 1DO9-20-08RN. (the same with above)

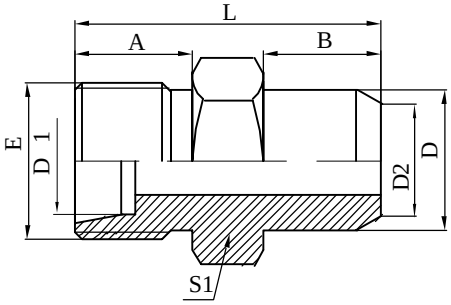

1CW

公制外螺纹24°轻系列/焊接接头
METRIC MALE 24°L.T./WELD FITTINGS

代号 PART NO.	螺纹 THREADE		管子外径 TUBE O.D.			尺 寸 DIMENSIONS				
	E		D1	D2		A	B	D	S1	L
1CW-12-06	M12x1.5		6	6		10	7	10	12	23
1CW-14-08	M12x1.5		8	8		11	8	12	14	25
1CW-16-10	M16x1.5		10	10		11	8	14	17	25
1CW-18-12	M18x1.5		12	12		11.5	8	16	19	25.5
1CW-22-15	M22x1.5		15	15		12.5	10	19	22	30
1CW-26-22	M26x1.5		18	22		12	10	27	27	32
1CW-30-22	M30x2		22	22		14	12	27	32	37
1CW-30-25	M30x2		22	25		14	12	31	32	37
1CW-36-28	M36x2		28	28		16	12	32	36	39
1CW-45-35	M45x2		35	35		18	14	40	46	45
1CW-52-42	M52x2		42	42		19	16	46	55	52

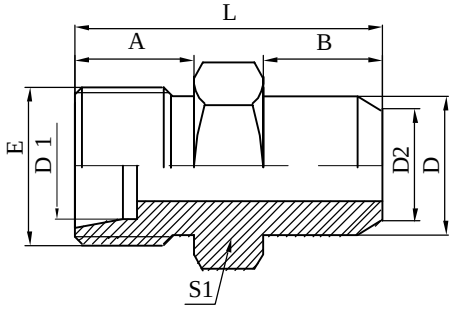

1DW

公制外螺纹24°重系列/焊接接头
METRIC MALE 24°H.T./WELD FITTINGS

代号 PART NO.	螺纹 THREADE		管子外径 TUBE O.D.			尺 寸 DIMENSIONS				
	E		D1	D2		A	B	D	S1	L
1DW-14-06	M14x1.5		6	6		12	7	11	14	25
1DW-16-08	M16x1.5		8	8		12	8	13	17	26
1DW-18-10	M18x1.5		10	10		12	8	15	19	26
1DW-20-12	M20x1.5		12	12		12	10	17	22	29
1DW-24-16	M24x1.5		16	16		14	10	21	27	33
1DW-30-20	M30x2		20	20		16	12	26	32	38
1DW-36-25	M36x2		25	25		18	12	31	41	42
1DW-42-30	M42x2		30	30		20	14	36	46	47
1DW-52-38	M52x2		38	38		22	16	44	55	55

备注:如需带卡套及卡套螺母整套订货,则请在代号后加"RN",如"1DW-20-12RN"(同上)
Remark:In case if you are interested to order the adapter in complete set with cutting ring and nut,it is necessary to insert suffix"RN" arter our part NO.,for example 1DW-20-12RN. (the same with above)

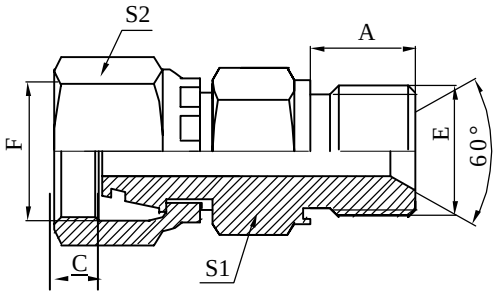

2BC-WD

公制螺纹24°轻系列/英管螺纹
60°锥面组合垫密封
METRIC FEMALE 24°L.T./BSP MALE
DOUBLE 60°SEAT BONDED SEAL

代号 PART NO.	螺纹 THREADE		管子外径 TUBE O.D.			尺 寸 DIMENSIONS				
	E	F	D1			A	C	S1	S2	
2BC-02-12WD	G1/8"X28	M12x1.5	6			10	2	14	17	
2BC-04-14WD	G1/4"X19	M14x1.5	8			12	3.5	19	19	
2BC-04-16WD	G1/4"X19	M16x1.5	10			12	3.5	19	22	
2BC-06-18WD	G3/8"X19	M18x1.5	12			13.5	3.5	22	24	
2BC-08-22WD	G1/2"X14	M22x1.5	15			16	3	27	27	
2BC-08-26WD	G1/2"X14	M26x1.5	18			16	3.5	27	32	
2BC-12-30WD	G3/4"X14	M30x2	22			18.5	4.5	32	36	
2BC-16-36WD	G1"X11	M36x2	28			20.5	4.5	41	41	
2BC-20-45WD	G1.1/4"X11	M45x2	35			20.5	5.5	50	55	
2BC-24-52WD	G1.1/2"X11	M52x2	42			23	6.5	55	60	

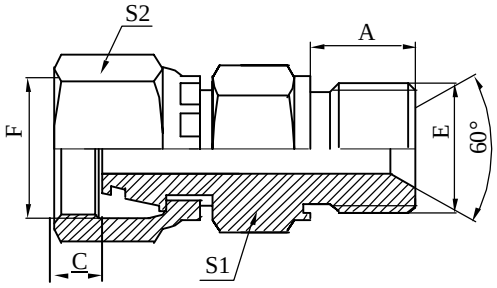

2BD-WD

公制螺纹24°重系列/英管螺纹
60°锥面组合垫密封
METRIC FEMALE 24°H.T./BSP MALE
DOUBLE 60°SEAT BONDED SEAL

代号 PART NO.	螺纹 THREADE		管子外径 TUBE O.D.			尺 寸 DIMENSIONS				
	E	F	D1			A	C	S1	S2	
2BD-04-14WD	G1/4"X19	M14x1.5	6			12	3	19	19	
2BD-04-16WD	G1/4"X19	M16x1.5	8			12	3.5	19	22	
2BD-06-18WD	G3/8"X19	M18x1.5	10			13.5	3	22	24	
2BD-06-20WD	G3/8"X19	M20x1.5	12			13.5	3	22	27	
2BD-08-22WD	G1/2"X14	M22x1.5	14			16	2.5	27	27	
2BD-08-24WD	G1/2"X14	M24x1.5	16			16	3.5	27	30	
2BD-12-30WD	G3/4"X14	M30x2	20			18.5	4.5	32	36	
2BD-16-36WD	G1"X11	M36x2	25			20.5	3.5	41	41	
2BD-20-42WD	G1.1/4"X11	M42x2	30			20.5	5.5	50	50	
2BD-24-52WD	G1.1/2"X11	M52x2	38			23	7	55	60	

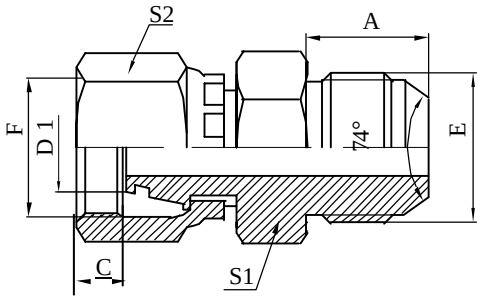

2JC

美制JIC 74°锥密封/公制内螺
纹24°锥O型圈密封轻系列
JIC 74°CONE SEALING/METRIC
FEMALE 24°CONE O-RING SEALING L.T.

代号 PART NO.	螺纹 THREADE		管子外径 TUBE O.D.			尺 寸 DIMENSIONS				
	E	F	D1			A	C	S1	S2	
2JC-04-12	U7/16"X20	M12x1.5	6			14	2	14	17	
2JC-04-14	U7/16"X20	M14x1.5	8			14	3.5	14	19	
2JC-05-14	U1/2"X20	M14x1.5	8			14	3.5	14	19	
2JC-05-16	U1/2"X20	M16x1.5	10			14	3.5	17	22	
2JC-06-14	U9/16"X18	M14x1.5	8			14	3.5	17	19	
2JC-06-16	U9/16"X18	M16x1.5	10			14	3.5	17	22	
2JC-06-18	U9/16"X18	M18x1.5	12			14	3.5	17	24	
2JC-08-18	U3/4"X16	M18x1.5	12			16.7	3.5	22	24	
2JC-08-22	U3/4"X16	M22x1.5	15			16.7	3	22	27	
2JC-10-22	U7/8"X14	M22x1.5	15			19.5	3	24	27	
2JC-10-26	U7/8"X14	M26x1.5	18			19.5	3.5	27	32	
2JC-12-26	U1.1/16"X12	M26x1.5	18			22	3.5	27	32	
2JC-12-30	U1.1/16"X12	M30x2	22			22	4.5	30	36	
2JC-16-36	U1.5/16"X12	M36x2	28			23	4.5	36	41	
2JC-16-45	U1.5/16"X12	M45x2	35			23	5.5	46	55	
2JC-20-45	U1.5/8"X12	M45x2	35			24.5	5.5	46	55	
2JC-20-52	U1.5/8"X12	M52x2	42			24.5	6.5	50	60	
2JC-24-52	U1.7/8"X12	M52x2	42			27.5	6.5	50	60	

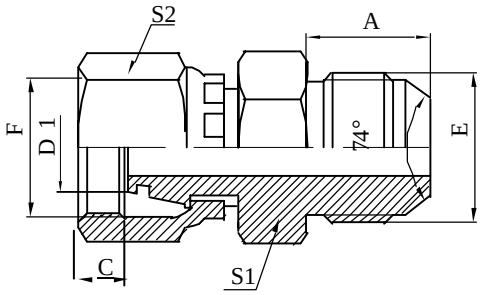

2JD

美制JIC 74°锥密封/公制内螺
纹24°锥O型圈密封重系列
JIC 74°CONE SEALING/METRIC
FEMALE 24°CONE O-RING SEALING H.T.

代号 PART NO.	螺纹 THREADE		管子外径 TUBE O.D.			尺 寸 DIMENSIONS				
	E	F	D1			A	C	S1	S2	
2JD-04-14	U7/16"X20	M14x1.5	6			14	3	14	19	
2JD-04-16	U7/16"X20	M16x1.5	8			14	3.5	17	22	
2JD-04-18	U7/16"X20	M18x1.5	10			14	3	17	24	
2JD-05-18	U1/2"X20	M18x1.5	10			14	3	17	24	
2JD-06-16	U9/16"X18	M16x1.5	8			14	3.5	17	22	
2JD-06-18	U9/16"X18	M18x1.5	10			14	3	17	24	
2JD-06-20	U9/16"X18	M20x1.5	12			14	3	19	27	
2JD-06-22	U9/16"X18	M22x1.5	14			14	2.5	22	27	
2JD-08-22	U3/4"X16	M22x1.5	14			16.7	2.5	22	27	
2JD-08-24	U3/4"X16	M24x1.5	16			16.7	3.5	24	30	
2JD-10-30	U7/8"X14	M30x2	20			19.5	4.5	30	36	
2JD-10-36	U7/8"X14	M36x2	25			19.5	3.5	36	41	
2JD-12-30	U1.1/16"X12	M30x2	20			22	4.5	30	36	
2JD-12-36	U1.1/16"X12	M36x2	25			22	3.5	36	41	
2JD-16-42	U1.5/16"X12	M42x2	30			23	5.5	41	50	
2JD-20-42	U1.5/8"X12	M42x2	30			24.5	5.5	46	50	
2JD-20-52	U1.5/8"X12	M52x2	38			24.5	7	50	60	
2JD-24-52	U1.7/8"X12	M52x2	38			27.5	7	50	60	

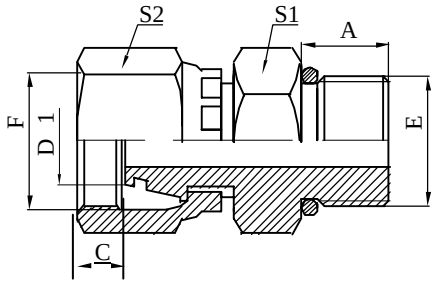

2GC

公制螺纹24°轻系列锥O型圈/
英管螺纹 O型圈密封
METRIC FEMALE 24°L.T.CONE O-RING/
BSP MALEO-RING

代号 PART NO.	螺纹 THREADE		管子外径 TUBE O.D.			尺 寸 DIMENSIONS				
	E	F	D1			A	C	S1	S2	
2GC-02-12	G1/8"X28	M12x1.5	6			9	2	14	17	
2GC-04-14	G1/4"X19	M14x1.5	8			12	3.5	19	19	
2GC-04-16	G1/4"X19	M16x1.5	10			12	3.5	19	22	
2GC-06-18	G3/8"X19	M18x1.5	12			13.5	3.5	22	24	
2GC-08-22	G1/2"X14	M22x1.5	15			16	3	27	27	
2GC-08-26	G1/2"X14	M26x1.5	18			16	3.5	27	32	
2GC-12-30	G3/4"X14	M30x2	22			18.5	4.5	32	36	
2GC-16-36	G1"X11	M36x2	28			20.5	4.5	41	41	
2GC-20-45	G1.1/4"X11	M45x2	35			20.5	5.5	50	55	
2GC-24-52	G1.1/2"X11	M52x2	42			23	6.5	55	60	

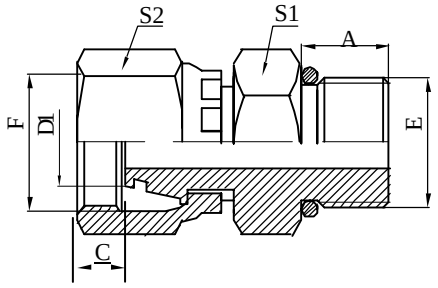

2GD

公制螺纹24°重系列锥O型圈/
英管螺纹O型圈密封
METRIC FEMALE 24°H.T.CONE O-RING/
BSP MALEO-RING

代号 PART NO.	螺纹 THREADE		管子外径 TUBE O.D.			尺 寸 DIMENSIONS				
	E	F	D1			A	C	S1	S2	
2GD-04-14	G1/4"X19	M14x1.5	6			12	3	19	19	
2GD-04-16	G1/4"X19	M16x1.5	8			12	3.5	19	22	
2GD-06-18	G3/8"X19	M18x1.5	10			13.5	3	22	24	
2GD-06-20	G3/8"X19	M20x1.5	12			13.5	3	22	27	
2GD-08-22	G1/2"X14	M22x1.5	14			16	2.5	27	27	
2GD-08-24	G1/2"X14	M24x1.5	16			16	3.5	27	30	
2GD-12-30	G3/4"X14	M30x2	20			18.5	4.5	32	36	
2GD-16-36	G1"X11	M36x2	25			20.5	3.5	41	41	
2GD-20-42	G1.1/4"X11	M42x2	30			20.5	5.5	50	50	
2GD-24-52	G1.1/2"X11	M52x2	38			23	7	55	60	

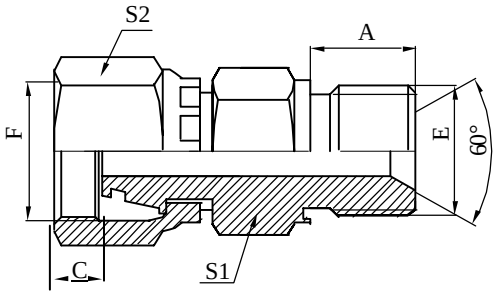

2MC-WD

公制螺纹胶垫密封/公制内螺纹24°
锥面O型圈密封轻系列
METRIC THREAD /METRIC FEMALE
24°CONE O-RING SEAL L.T.

代号 PART NO.	螺纹 THREADE		管子外径 TUBE O.D.			尺 寸 DIMENSIONS				
	E	F	D1			A	C	S1	S2	
2MC-12-14WD	M12x1.5	M14x1.5	8			10	3.5	17	19	
2MC-14-16WD	M14x1.5	M16x1.5	10			11	3.5	19	22	
2MC-16-18WD	M16x1.5	M18x1.5	12			12	3.5	22	24	
2MC-18-22WD	M18x1.5	M22x1.5	15			12	3	24	27	
2MC-22-26WD	M22x1.5	M26x1.5	18			14	3.5	27	32	

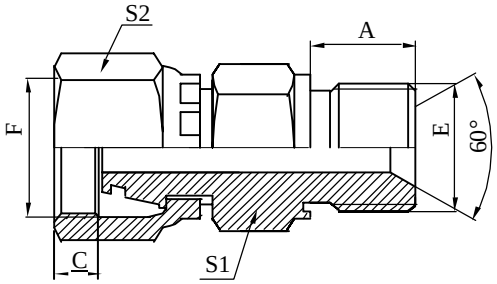

2MD-WD

公制螺纹胶垫密封/公制内螺纹24°
锥面O型圈密封重系列
METRIC THREAD /METRIC FEMALE
24°CONE O-RING SEAL H.T.

代号 PART NO.	螺纹 THREADE		管子外径 TUBE O.D.			尺 寸 DIMENSIONS				
	E	F	D1			A	C	S1	S2	
2MD-12-14WD	M12x1.5	M14x1.5	6			10	3	17	19	
2MD-14-16WD	M14x1.5	M16x1.5	8			11	3.5	19	22	
2MD-16-18WD	M16x1.5	M18x1.5	10			12	3	22	24	
2MD-18-20WD	M18x1.5	M20x1.5	12			12	3	24	27	
2MD-22-24WD	M22x1.5	M22x1.5	16			14	3.5	27	30	

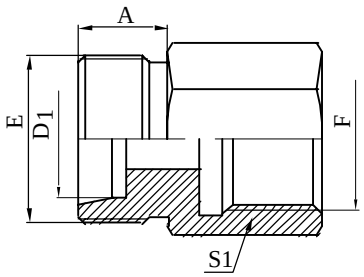

5CB

公制螺纹24°轻系列/英管内螺纹
METRIC MALE 24 °L.T./BSP FEMALE

代号 PART NO.	螺纹 THREADE		管子外径 TUBE O.D.			尺 寸 DIMENSIONS				
	E	F	D1			A		S1		
5CB-12-02	M12x1.5	G1/8"X28	6			10		14		
5CB-12-04	M12x1.5	G1/4"X19	6			10		19		
5CB-14-04	M14x1.5	G1/4"X19	8			11		19		
5CB-14-06	M14x1.5	G3/8"X19	8			11		24		
5CB-14-08	M14x1.5	G1/2"X14	8			11		27		
5CB-16-04	M16x1.5	G1/4"X19	10			11		19		
5CB-16-06	M16x1.5	G3/8"X19	10			11		24		
5CB-16-08	M16x1.5	G1/2"X14	10			11		27		
5CB-18-04	M18x1.5	G1/4"X19	12			11.5		19		
5CB-18-06	M18x1.5	G3/8"X19	12			11.5		24		
5CB-18-08	M18x1.5	G1/2"X14	12			11.5		27		
5CB-22-06	M22x1.5	G3/8"X19	15			12.5		24		
5CB-22-08	M22x1.5	G1/2"X14	15			12.5		27		
5CB-26-08	M26x1.5	G1/2"X14	18			12		27		
5CB-30-12	M30x2	G3/4"X14	22			14		36		
5CB-36-16	M36x2	G1"X11	28			16		41		
5CB-45-20	M45x2	G1.1/4"X11	35			18		55		
5CB-52-24	M52x2	G1.1/2"X11	42			19		60		

备注:如需带卡套及卡套螺母整套订货,则请在代号后加"RN",如"5CB-22-08RN"
Remark:In case if you are interested to order the adapter in complete set with cutting ring and nut,it is necessary to insert suffix"RN" arter our part NO.,for example 5CB-22-08RN.

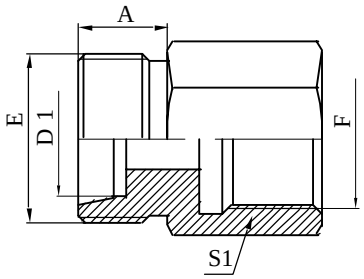

5DB

公制螺纹24°重系列/英管内螺纹
METRIC MALE 24°H.T./BSP FEMALE

代号 PART NO.	螺纹 THREADE		管子外径 TUBE O.D.			尺 寸 DIMENSIONS				
	E	F	D1			A		S1		
5DB-14-04	M14x1.5	G1/4"X19	6			12		19		
5DB-16-04	M16x1.5	G1/4"X19	8			12		19		
5DB-18-06	M18x1.5	G3/8"X19	10			12		24		
5DB-20-06	M20x1.5	G3/8"X19	12			12		24		
5DB-20-08	M20x1.5	G1/2"X14	12			12		24		
5DB-22-08	M22x1.5	G1/2"X14	14			14		30		
5DB-24-08	M24x1.5	G1/2"X14	16			14		30		
5DB-30-12	M30x2	G3/4"X14	20			16		36		
5DB-36-16	M36x2	G1"X11	25			18		41		
5DB-42-20	M42x2	G1.1/4"X11	30			20		55		
5DB-52-24	M52x2	G1.1/2"X11	38			22		60		

备注:如需带卡套及卡套螺母整套订货,则请在代号后加"RN",如"5DB-22-08RN"
Remark:In case if you are interested to order the adapter in complete set with cutting ring and nut,it is necessary to insert suffix"RN" arter our part NO.,for example 5DB-22-08RN.

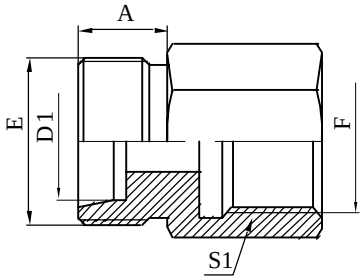

5CM

公制螺纹24°轻系列/公制内螺纹
METRIC MALE 24°L.T./METRIC FEMALE

代号 PART NO.	螺纹 THREADE		管子外径 TUBE O.D.			尺 寸 DIMENSIONS				
	E	F	D1			A		S1		
5CM-12-10	M12x1.5	M10x1	6			10		14		
5CM-14-12	M14x1.5	M12x1.5	8			11		17		
5CM-16-14	M16x1.5	M14x1.5	10			11		19		
5CM-18-16	M18x1.5	M16x1.5	12			11.5		22		
5CM-22-18	M22x1.5	M18x1.5	15			12.5		24		
5CM-26-22	M26x1.5	M22x1.5	18			12		30		
5CM-30-26	M30x2	M26x1.5	22			14		32		
5CM-36-33	M36x2	M33x2	28			16		41		
5CM-45-42	M45x2	M42x2	35			18		55		
5CM-52-48	M52x2	M48x2	42			19		60		

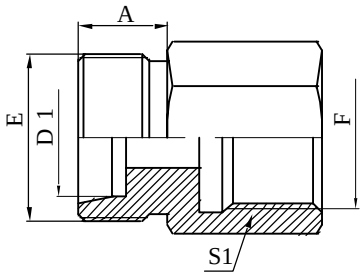

5DM

公制螺纹24°重系列/公制内螺纹
METRIC MALE 24°H.T./METRIC FEMALE

代号 PART NO.	螺纹 THREADE		管子外径 TUBE O.D.			尺 寸 DIMENSIONS				
	E	F	D1			A		S1		
5DM-14-12	M14x1.5	M12x1.5	6			12		17		
5DM-16-14	M16x1.5	M14x1.5	8			12		19		
5DM-18-16	M18x1.5	M16x1.5	10			12		22		
5DM-20-18	M20x1.5	M18x1.5	12			12		24		
5DM-22-20	M22x1.5	M20x1.5	14			14		27		
5DM-24-22	M24x1.5	M22x1.5	16			14		30		
5DM-30-27	M30x2	M27x1.5	20			16		36		
5DM-36-33	M36x2	M33x2	25			18		41		
5DM-42	M42x2	M42x2	30			20		55		
5DM-52-48	M52x2	M48x2	38			22		60		

备注:如需带卡套及卡套螺母整套订货,则请在代号后加"RN",如"5DM-20-18RN"(同上)
Remark:In case if you are interested to order the adapter in complete set with cutting ring and nut,it is necessary to insert suffix"RN" arter our part NO.,for example 5DM-20-18RN. (the same with above)

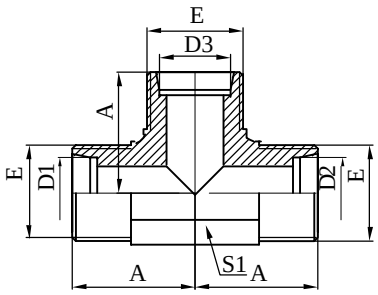

AC

公制外螺纹24°轻系列三通
METRIC MALE 24°L.T. TEE

代号 PART NO.	螺纹 THREADE		管子外径 TUBE O.D.			尺 寸 DIMENSIONS				
	E		D1,D2,D3			A		S1		
AC-12	M12x1.5		6			23		11		
AC-14	M14x1.5		8			27		14		
AC-16	M16x1.5		10			29		17		
AC-18	M18x1.5		12			32		19		
AC-22	M22x1.5		15			33		22		
AC-26	M26x1.5		18			40		27		
AC-30	M30x2		22			40		27		
AC-36	M36x2		28			46		33		

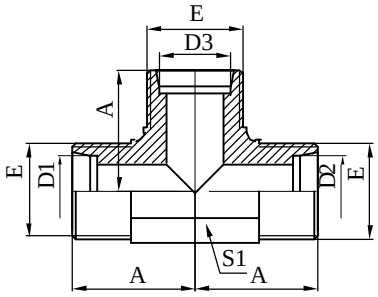

AD

公制外螺纹24°重系列三通
METRIC MALE 24°H.T. TEE

代号 PART NO.	螺纹 THREADE		管子外径 TUBE O.D.			尺 寸 DIMENSIONS				
	E		D1,D2,D3			A		S1		
AD-14	M14x1.5		6			27		14		
AD-16	M16x1.5		8			29		17		
AD-18	M18x1.5		10			32		19		
AD-20	M20x1.5		12			33		22		
AD-22	M22x1.5		14			33		22		
AD-24	M24x1.5		16			33		24		
AD-30	M30x2		20			40		27		
AD-33	M33x2		22			46		33		
AD-42	M42x2		30			57		44		

备注:如需带卡套及卡套螺母整套订货,则请在代号后加"RN",如"AD-22RN"(同上)
Remark:In case if you are interested to order the adapter in complete set with cutting ring and nut,it is necessary to insert suffix"RN" arter our part NO.,for example AD-22RN. (the same with above)

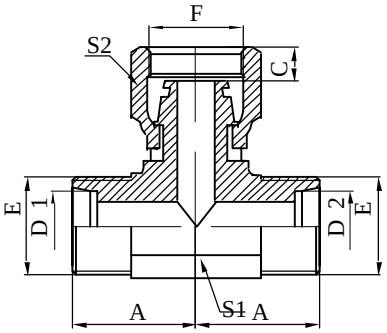

BC

公制内螺纹24°/公制外螺纹24°轻系列三通

METRIC FEMALE 24°/METRIC MALE 24 °L.T. TEE

代号 PART NO.	螺纹 THREADE		管子外径 TUBE O.D.			尺 寸 DIMENSIONS				
	E	F	D1	D2		A	C	S1	S2	
BC-12	M12x1.5	M12x1.5	6	6		23	2	11	17	
BC-14	M14x1.5	M14x1.5	8	8		27	3.5	14	19	
BC-16	M16x1.5	M16x1.5	10	10		29	3.5	17	22	
BC-18	M18x1.5	M18x1.5	12	12		32	3.5	19	24	
BC-22	M22x1.5	M22x1.5	15	15		33	3	22	27	
BC-26	M26x1.5	M26x1.5	18	18		40	3.5	27	32	
BC-30	M30x2	M30x2	22	22		40	4.5	27	36	
BC-36	M36x2	M36x2	28	28		46	4.5	33	41	

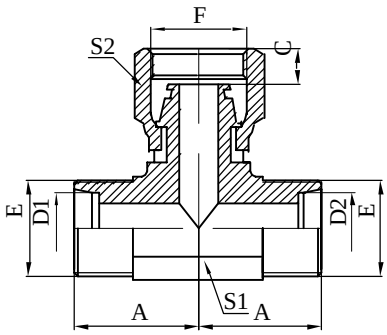

BD

公制内螺纹24°/公制外螺纹24°重系列三通

METRIC FEMALE 24°/METRIC MALE 24°H.T. TEE

代号 PART NO.	螺纹 THREADE		管子外径 TUBE O.D.			尺 寸 DIMENSIONS				
	E	F	D1	D2		A	C	S1	S2	
BD-14	M14x1.5	M14x1.5	6	6		27	3	14	19	
BD-16	M16x1.5	M16x1.5	8	8		29	3.5	17	22	
BD-18	M18x1.5	M18x1.5	10	10		32	3	19	24	
BD-20	M20x1.5	M20x1.5	12	12		33	3	22	27	
BD-22	M22x1.5	M22x1.5	14	14		33	2.5	22	27	
BD-24	M24x1.5	M24x1.5	16	16		33	3.5	24	30	
BD-30	M30x2	M30x2	20	20		40	4.5	27	36	
BD-36	M36x2	M36x2	25	25		46	3.5	33	41	
BD-42	M42x2	M42x2	30	30		57	5.5	44	50	

备注:如需带卡套及卡套螺母整套订货,则请在代号后加"RN",如"BD-22RN"(同上)
Remark:In case if you are interested to order the adapter in complete set with cutting ring and nut,it is necessary to insert suffix"RN" arter our part NO.,for example BD-22RN. (the same with above)

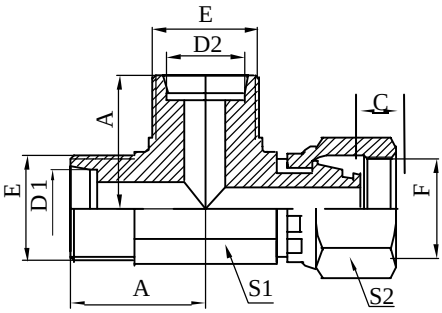

CC

公制外螺纹24°/公制内
螺纹24°轻系列三通
METRIC MALE 24°/METRIC
FEMALE 24°L.T. TEE

代号 PART NO.	螺纹 THREADE		管子外径 TUBE O.D.			尺 寸 DIMENSIONS				
	E	F	D1	D2		A	C	S1	S2	
CC-12	M12x1.5	M12x1.5	6	6		23	2	11	17	
CC-14	M14x1.5	M14x1.5	8	8		27	3.5	14	19	
CC-16	M16x1.5	M16x1.5	10	10		29	3.5	17	22	
CC-18	M18x1.5	M18x1.5	12	12		32	3.5	19	24	
CC-22	M22x1.5	M22x1.5	15	15		33	3	22	27	
CC-26	M26x1.5	M26x1.5	18	18		40	3.5	27	32	
CC-30	M30x2	M30x2	22	22		40	4.5	27	36	
CC-36	M36x2	M36x2	28	28		46	4.5	33	41	

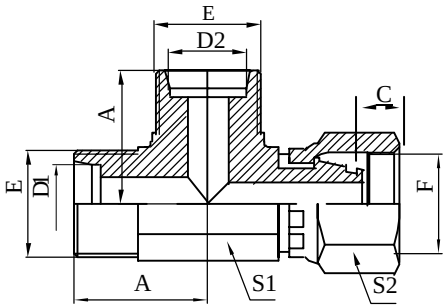

CD

公制外螺纹24°/公制内
螺纹24°\u37325X系列三通
METRIC MALE 24°/METRIC
FEMALE 24°H.T. TEE

代号 PART NO.	螺纹 THREADE		管子外径 TUBE O.D.			尺 寸 DIMENSIONS				
	E	F	D1	D2		A	C	S1	S2	
BD-14	M14x1.5	M14x1.5	6	6		27	3	14	19	
BD-16	M16x1.5	M16x1.5	8	8		29	3.5	17	22	
BD-18	M18x1.5	M18x1.5	10	10		32	3	19	24	
BD-20	M20x1.5	M20x1.5	12	12		33	3	22	27	
BD-22	M22x1.5	M22x1.5	14	14		33	2.5	22	27	
BD-24	M24x1.5	M24x1.5	16	16		33	3.5	24	30	
BD-30	M30x2	M30x2	20	20		40	4.5	27	36	
BD-36	M36x2	M36x2	25	25		46	3.5	33	41	
BD-42	M42x2	M42x2	30	30		57	5.5	44	50	

备注:如需带卡套及卡套螺母整套订货,则请在代号后加"RN",如"BD-22RN"（同上）
Remark:In case if you are interested to order the adapter in complete set with cutting ring and nut,it is necessary to insert suffix"RN" arter our part NO.,for example BD-22RN.（the same with above)

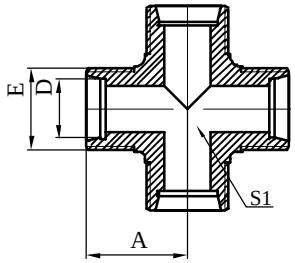

XC

公制外螺纹24°轻系列四通
METRIC MALE 24°L.T. CROSS

代号 PART NO.	螺纹 THREADE		管子外径 TUBE O.D.			尺 寸 DIMENSIONS				
	E		D			A		S1		
XC-12	M12x1.5		6			23		11		
XC-14	M14x1.5		8			27		14		
XC-16	M16x1.5		10			29		17		
XC-18	M18x1.5		12			32		19		
XC-22	M22x1.5		15			33		22		
XC-26	M26x1.5		18			40		27		
XC-30	M30x2		22			40		27		
XC-33	M33x2		25			46		33		

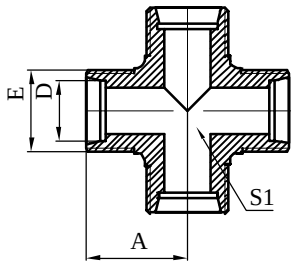

XD

公制外螺纹24°重系列四通
METRIC MALE 24°H.T. CROSS

代号 PART NO.	螺纹 THREADE		管子外径 TUBE O.D.			尺 寸 DIMENSIONS				
	E		D			A		S1		
XD-14	M14x1.5		6			27		14		
XD-16	M16x1.5		8			29		17		
XD-18	M18x1.5		10			32		19		
XD-20	M20x1.5		12			32		19		
XD-22	M22x1.5		14			33		22		
XD-24	M24x1.5		16			33		24		
XD-30	M30x2		20			40		27		
XD-33	M33x2		22			46		33		
XD-42	M42x2		30			57		44		

备注:如需带卡套及卡套螺母整套订货,则请在代号后加"RN",如"XD-22RN"(同上）
Remark:In case if you are interested to order the adapter in complete set with cutting ring and nut,it is necessary to insert suffix"RN" arter our part NO.,for example XD-22RN.（the same with above)

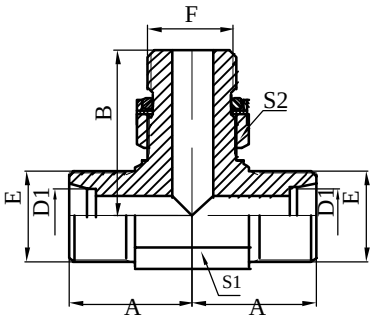

ACHC-OG

公制外螺纹24°轻系列可调向柱端分支三通
METRIC MALE 24°L.T.ADJUSTABLE
STUD BRADCH TEE

代号 PART NO.	螺纹 THREADE		管子外径 TUBE O.D.		O型圈 O-RING	尺 寸 DIMENSIONS				
	E	F	D1			A	B	S1	S2	
ACHC-12-10-12OG	M12x1.5	M10x1	6		8.1x1.6	23	26.5	11	14	
ACHC-14-12-14OG	M14x1.5	M12x1.5	8		9.3x2.4	27	32	14	17	
ACHC-16-14-16OG	M16x1.5	M14x1.5	10		11.3x2.4	29	34	17	19	
ACHC-18-16-18OG	M18x1.5	M16x1.5	12		13.3x2.4	32	36	19	22	
ACHC-22-18-22OG	M22x1.5	M18x1.5	15		15.3x2.4	33	39.5	22	24	
ACHC-26-22-26OG	M26x1.5	M22x1.5	18		19.3x2.4	40	43.5	37	27	
ACHC-30-27-30OG	M30x2	M27x2	22		23.5x3	40	50	27	32	
ACHC-36-33-36OG	M36x2	M33x2	28		29.5x3	46	54	33	41	

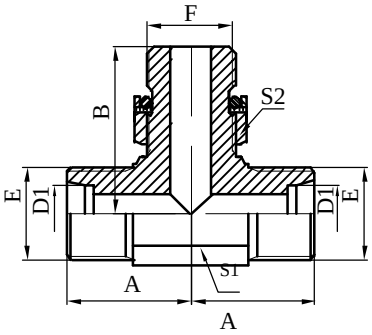

ADHD-OG

公制外螺纹24°重系列可调向柱端分支三通
METRIC MALE 24°H.T.ADJUSTABLE
STUD BRADCH TEE

代号 PART NO.	螺纹 THREADE		管子外径 TUBE O.D.		O型圈 O-RING	尺 寸 DIMENSIONS				
	E	F	D1			A	B	S1	S2	
ADHD-14-12-14OG	M14x1.5	M12x1.5	6		9.3x2.4	27	32	14	17	
ADHD-16-14-16OG	M16x1.5	M14x1.5	8		11.3x2.4	29	34	17	19	
ADHD-18-16-18OG	M18x1.5	M16x1.5	10		13.3x2.4	32	36	19	22	
ADHD-20-18-20OG	M20x1.5	M18x1.5	12		15.3x2.4	33	37	22	24	
ADHD-24-22-24OG	M24x1.5	M22x1.5	16		19.3x2.4	33	37.5	24	27	
ADHD-30-27-30OG	M30x2	M27x2	20		23.5x3	40	50	27	32	
ADHD-36-33-36OG	M36x2	M33x2	25		29.5x3	46	54	33	41	
ADHD-42-42-42OG	M42x2	M42x2	30		38.5x3	57	57.2	44	50	

备注:如需带卡套及卡套螺母整套订货,则请在代号后加"RN",如"ADHD-20-18OG/RN"（同上）
Remark:In case if you are interested to order the adapter in complete set with cutting ring and nut,it is necessary to insert suffix"RN" arter our part NO.,for example ADHD-20-18OG/RN.（the same with above)

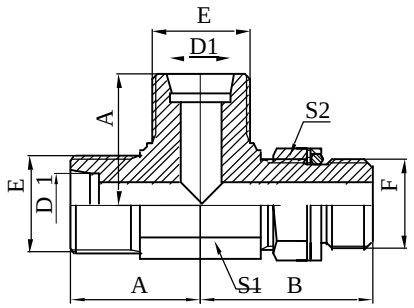

ACCH-OG

公制外螺纹24°轻系列可
调向柱端主支三通
METRIC MALE 24°L.T.
ADJUSTABLE STUD RUN TEE

代号 PART NO.	螺纹 THREADE		管子外径 TUBE O.D.		O型圈 O-RING	尺 寸 DIMENSIONS				
	E	F	D1			A	B	S1	S2	
ACCH-12-12-10OG	M12x1.5	M10x1	6		8.1x1.6	23	26.5	11	14	
ACCH-14-14-12OG	M14x1.5	M12x1.5	8		9.3x2.4	27	32	14	17	
ACCH-16-16-14OG	M16x1.5	M14x1.5	10		11.3x2.4	29	34	17	19	
ACCH-18-18-16OG	M18x1.5	M16x1.5	12		13.3x2.4	32	36	19	22	
ACCH-22-22-18OG	M22x1.5	M18x1.5	15		15.3x2.4	33	39.5	22	24	
ACCH-26-26-22OG	M26x1.5	M22x1.5	18		19.3x2.4	40	43.5	27	27	
ACCH-30-30-27OG	M30x2	M27x2	22		23.5x3	40	50	27	32	
ACCH-36-36-33OG	M36x2	M33x2	28		29.5x3	46	54	33	41	

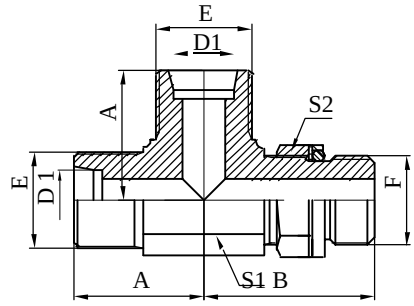

ADDH-OG

公制外螺纹24°重系列可
调向柱端主支三通
METRIC MALE 24°H.T.
ADJUSTABLE STUD RUN TEE

代号 PART NO.	螺纹 THREADE		管子外径 TUBE O.D.		O型圈 O-RING	尺 寸 DIMENSIONS				
	E	F	D1			A	B	S1	S2	
ADDH-14-14-12OG	M14x1.5	M12x1.5	6		9.3x2.4	27	32	14	17	
ADDH-16-16-14OG	M16x1.5	M14x1.5	8		11.3x2.4	29	34	17	19	
ADDH-18-18-16OG	M18x1.5	M16x1.5	10		13.3x2.4	32	36	19	22	
ADDH-20-20-18OG	M20x1.5	M18x1.5	12		15.3x2.4	33	37	22	24	
ADDH-24-24-22OG	M24x1.5	M22x1.5	16		19.3x2.4	33	37.5	24	27	
ADDH-30-30-27OG	M30x2	M27x2	20		23.5x3	40	50	27	32	
ADDH-36-36-33OG	M36x2	M33x2	25		29.5x3	46	54	33	41	
ADDH-42-42-42OG	M42x2	M42x2	30		38.5x3	57	57.2	44	50	

备注:如需带卡套及卡套螺母整套订货,则请在代号后加"RN",如"ADDH-20-20-18OG/RN"（同上）
Remark:In case if you are interested to order the adapter in complete set with cutting ring and nut,it is necessary to insert suffix"RN" arter our part NO.,for example ADDH-20-20-18OG/RN. (the same with above)

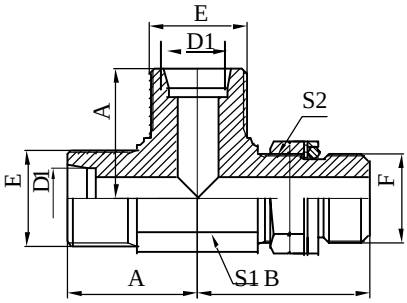

ACCG-OG

公制外螺纹24°轻系列
/英管可调向柱端主支三通
METRIC MALE 24°L.T.
/BSP MALE ADJUSTABLE STUD RUN TEE

代号 PART NO.	螺纹 THREADE		管子外径 TUBE O.D.			尺 寸 DIMENSIONS				
	E	F	D1			A	B	S1	S2	
ACCG-12-12-02OG	M12x1.5	G1/8"X28	6			23	26.2	11	14	
ACCG-14-14-04OG	M14x1.5	G1/4"X19	8			27	31.3	14	17	
ACCG-16-16-04OG	M16x1.5	G1/4"X19	10			29	32.5	17	19	
ACCG-18-18-06OG	M18x1.5	G3/8"X19	12			32	36.8	19	22	
ACCG-22-22-08OG	M22x1.5	G1/2"X14	15			33	43.2	22	24	
ACCG-26-26-08OG	M26x1.5	G1/2"X14	18			33	46.5	27	27	
ACCG-30-30-12OG	M30x2	G3/4"X14	22			40	52	27	32	
ACCG-36-36-16OG	M36x2	G1"X11	28			46	56	33	41	

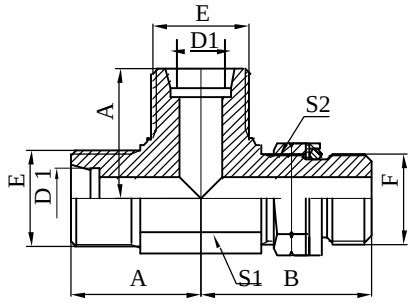

ADDG-OG

公制外螺纹24°重系列
/英管可调向柱端主支三通
METRIC MALE 24 °H.T.
/BSP MALE ADJUSTABLE STUD RUN TEE

代号 PART NO.	螺纹 THREADE		管子外径 TUBE O.D.			尺 寸 DIMENSIONS				
	E	F	D1			A	B	S1	S2	
ADDG-14-14-04OG	M14x1.5	G1/4"X19	6			27	31.3	14	19	
ADDG-16-16-04OG	M16x1.5	G1/4"X19	8			29	32.5	17	19	
ADDG-18-18-06OG	M18x1.5	G3/8"X19	10			32	36.8	19	22	
ADDG-20-20-06OG	M20x1.5	G3/8"X19	12			33	36.8	22	22	
ADDG-22-22-08OG	M22x1.5	G1/2"X14	14			33	43.2	22	27	
ADDG-24-24-08OG	M24x1.5	G1/2"X14	16			33	44	24	27	
ADDG-30-30-12OG	M30x2	G3/4"X14	20			40	52	27	32	
ADDG-36-36-16OG	M36x2	G1"X11	25			46	56	33	41	
ADDG-42-42-20OG	M42x2	G1.1/4"X11	30			57	58	44	50	

备注:如需带卡套及卡套螺母整套订货,则请在代号后加"RN",如"ADDG-20-20-06OG/RN"（同上）
Remark:In case if you are interested to order the adapter in complete set with cutting ring and nut,it is necessary to insert suffix"RN" arter our part NO.,for example ADDG-20-20-06OG/RN.(the same with above)

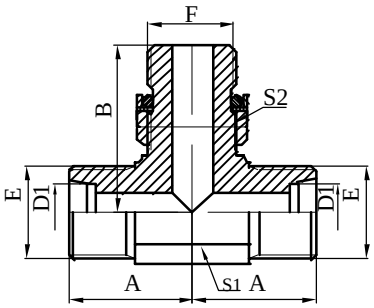

ACGC-OG

公制外螺纹24°轻系列
/英管可调向柱端分支三通
METRIC MALE 24°L.T.
/BSP MALE ADJUSTABLE STUD BRANCH TEE

代号 PART NO.	螺纹 THREADE		管子外径 TUBE O.D.			尺 寸 DIMENSIONS				
	E	F	D1			A	B	S1	S2	
ACGC-12-02-12OG	M12x1.5	G1/8"X28	6			23	26.2	11	14	
ACGC-14-04-14OG	M14x1.5	G1/4"X19	8			27	31.3	14	19	
ACGC-16-04-16OG	M16x1.5	G1/4"X19	10			29	32.5	17	19	
ACGC-18-06-18OG	M18x1.5	G3/8"X19	12			32	36.8	19	22	
ACGC-22-08-22OG	M22x1.5	G1/2"X14	15			33	43.2	22	27	
ACGC-26-08-26OG	M26x1.5	G1/2"X14	18			33	46.5	27	27	
ACGC-30-12-30OG	M30x2	G3/4"X14	22			40	52	27	32	
ACGC-36-16-36OG	M36x2	G1"X11	28			46	56	33	41	

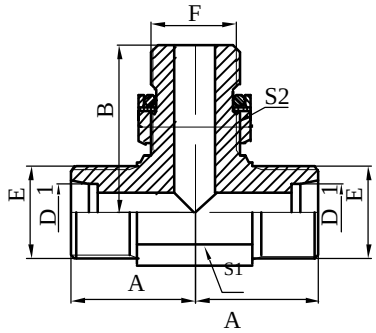

ADGD-OG

公制外螺纹24°重系列
/英管可调向柱端分支三通
METRIC MALE 24 °H.T.
/BSP MALE ADJUSTABLE STUD BRANCH TEE

代号 PART NO.	螺纹 THREADE		管子外径 TUBE O.D.			尺 寸 DIMENSIONS				
	E	F	D1			A	B	S1	S2	
ADGD-14-04-14OG	M14x1.5	G1/4"X19	6			27	31.3	14	19	
ADGD-16-04-16OG	M16x1.5	G1/4"X19	8			29	32.5	17	19	
ADGD-18-06-18OG	M18x1.5	G3/8"X19	10			32	36.8	19	22	
ADGD-20-06-20OG	M20x1.5	G3/8"X19	12			33	36.8	22	22	
ADGD-22-08-22OG	M22x1.5	G1/2"X14	14			33	43.2	22	27	
ADGD-24-08-24OG	M24x1.5	G1/2"X14	16			33	44	24	27	
ADGD-30-12-30OG	M30x2	G3/4"X14	20			40	52	27	32	
ADGD-36-16-36OG	M36x2	G1"X11	25			46	56	33	41	
ADGD-42-20-42OG	M42x2	G1.1/4"X11	30			57	58	44	50	

备注:如需带卡套及卡套螺母整套订货,则请在代号后加"RN",如"ADGD-20-06-20OG/RN"（同上）
Remark:In case if you are interested to order the adapter in complete set with cutting ring and nut,it is necessary to insert suffix"RN" arter our part NO.,for example ADGD-20-06-20OG/RN.(the same with above)

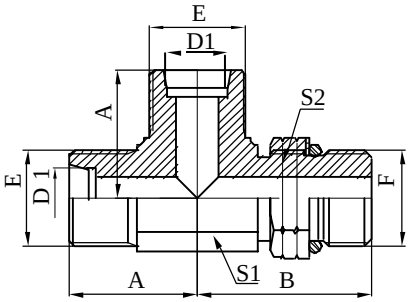

ACCO-OG

公制24°轻系列
/美制可调向柱端主支三通
METRIC MALE 24 °L.T.
/SAE MALE ADJUSTABLE STUD RUN TEE

代号 PART NO.	螺纹 THREADE		管子外径 TUBE O.D.			尺 寸 DIMENSIONS				
	E	F	D1			A	B	S1	S2	
ACCO-12-12-04OG	M12x1.5	U7/16"X20	6			23	27.2	11	17	
ACCO-14-14-06OG	M14x1.5	U9/16"X18	8			27	31.8	14	19	
ACCO-16-16-06OG	M16x1.5	U9/16"X18	10			29	33.3	17	19	
ACCO-18-18-08OG	M18x1.5	U3/4"X16	12			32	37.5	19	24	
ACCO-22-22-10OG	M22x1.5	U7/8"X14	15			33	44	22	27	
ACCO-26-26-12OG	M26x1.5	U1.1/16"X12	18			40	51	27	32	
ACCO-30-30-12OG	M30x2	U1.1/16"X12	22			40	53.5	27	32	
ACCO-36-36-16OG	M36x2	U1.5/16"X12	28			46	57.5	33	41	

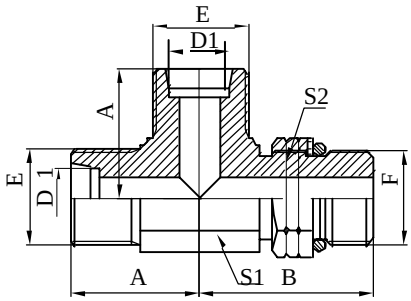

ADDO-OG

公制24°重系列
/美制可调向柱端主支三通
METRIC MALE 24 °H.T.
/SAE MALE ADJUSTABLE STUD RUN TEE

代号 PART NO.	螺纹 THREADE		管子外径 TUBE O.D.			尺 寸 DIMENSIONS				
	E	F	D1			A	B	S1	S2	
ADDO-14-14-04OG	M14x1.5	U7/16"X20	6			27	30	14	17	
ADDO-16-16-06OG	M16x1.5	U9/16"X18	8			29	33.3	17	19	
ADDO-18-18-06OG	M18x1.5	U9/16"X18	10			32	33.5	19	19	
ADDO-20-20-08OG	M20x1.5	U3/4"X16	12			33	37.5	22	24	
ADDO-22-22-10OG	M22x1.5	U7/8"X14	14			33	44	22	27	
ADDO-24-24-10OG	M24x1.5	U7/8"X14	16			33	46.5	24	27	
ADDO-30-30-12OG	M30x2	U1.1/16"X12	20			40	53.5	27	32	
ADDO-36-36-16OG	M36x2	U1.5/16"X12	25			46	57.5	33	41	
ADDO-42-42-20OG	M42x2	U1.5/8"X12	30			57	59.5	44	50	

备注:如需带卡套及卡套螺母整套订货,则请在代号后加"RN",如"ADDO-20-20-08OG/RN"（同上）
Remark:In case if you are interested to order the adapter in complete set with cutting ring and nut,it is necessary to insert suffix"RN" arter our part NO.,for example ADDO-20-20-08OG/RN.(the same with above)

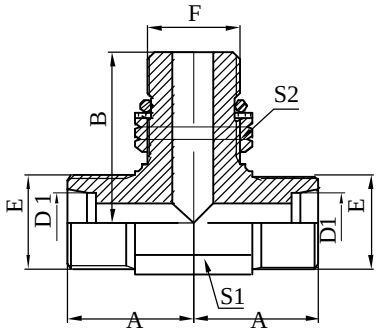

ACOC-OG

公制24°轻系列
/美制可调向柱端分支三通
METRIC MALE 24°L.T.
/SAE MALE ADJUSTABLE STUD BRANCH TEE

代号 PART NO.	螺纹 THREADE		管子外径 TUBE O.D.			尺 寸 DIMENSIONS				
	E	F	D1			A	B	S1	S2	
ACOC-12-04-12OG	M12x1.5	U7/16"X20	6			23	27.2	11	17	
ACOC-14-06-14OG	M14x1.5	U9/16"X18	8			27	31.8	14	19	
ACOC-16-06-16OG	M16x1.5	U9/16"X18	10			29	33.3	17	19	
ACOC-18-08-18OG	M18x1.5	U3/4"X16	12			32	37.5	19	24	
ACOC-22-10-22OG	M22x1.5	U7/8"X14	15			33	44	22	27	
ACOC-26-12-26OG	M26x1.5	U1.1/16"X12	18			40	51	27	32	
ACOC-30-12-30OG	M30x2	U1.1/16"X12	22			40	53.5	27	32	
ACOC-36-16-36OG	M36x2	U1.5/16"X12	28			46	57.5	33	41	

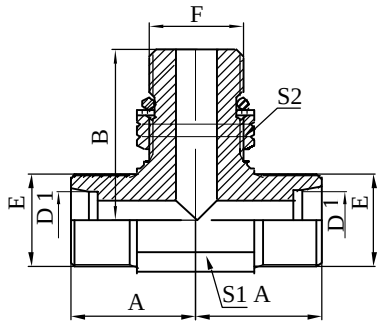

ADOD-OG

公制24°重系列
/美制可调向柱端分支三通
METRIC MALE 24°H.T.
/SAE MALE ADJUSTABLE STUD BRANCH TEE

代号 PART NO.	螺纹 THREADE		管子外径 TUBE O.D.			尺 寸 DIMENSIONS				
	E	F	D1			A	B	S1	S2	
ADOD-14-04-14OG	M14x1.5	U7/16"X20	6			27	30	14	17	
ADOD-16-06-16OG	M16x1.5	U9/16"X18	8			29	33.3	17	19	
ADOD-18-06-18OG	M18x1.5	U9/16"X18	10			32	33.5	19	19	
ADOD-20-08-20OG	M20x1.5	U3/4"X16	12			33	37.5	22	24	
ADOD-22-10-22OG	M22x1.5	U7/8"X14	14			33	44	22	27	
ADOD-24-10-24OG	M24x1.5	U7/8"X14	16			33	46.5	24	27	
AD0D-30-12-30OG	M30x2	U1.1/16"X12	20			40	53.5	27	32	
AD0D-36-16-36OG	M36x2	U1.5/16"X12	25			46	57.5	33	41	
AD0D-42-20-42OG	M42x2	U1.5/8"X12	30			57	59.5	44	50	

备注:如需带卡套及卡套螺母整套订货,则请在代号后加"RN",如"ADOD-20-08-20OG/RN"（同上）
Remark:In case if you are interested to order the adapter in complete set with cutting ring and nut,it is necessary to insert suffix"RN" arter our part NO.,for example ADOD-20-08-20OG/RN.（the same with above)

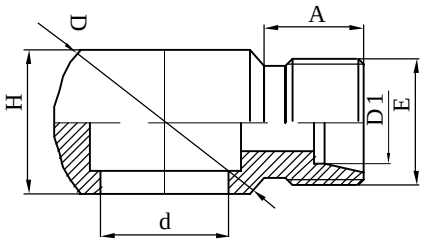

1CL-B

公制螺纹24°轻系列/英管螺纹铰接接头
METRIC MALE 24°L.T./BSP BANJO

代号 PART NO.	螺纹 THREADE		管子外径 TUBE O.D.		配用螺栓 BOLT	尺 寸 DIMENSIONS				
	E		D1			A	d	D	H	
1CL-12-B02	M12x1.5		6		720B-02	10	9.9	22	16	
1CL-14-B04	M14x1.5		8		720B-04	11	13.3	24	15	
1CL-16-B04	M16x1.5		10		720B-04	11	13.3	24	15	
1CL-18-B06	M18x1.5		12		720B-06	11.5	16.7	29	20	
1CL-22-B08	M22x1.5		15		720B-08	12.5	21	38	25	
1CL-26-B08	M26x1.5		18		720B-08	12	21	38	25	
1CL-30-B12	M30x2		22		720B-12	14	26.5	46	31	

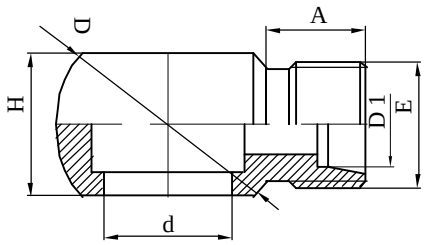

1DL-B

公制螺纹24°重系列/英管螺纹铰接接头
METRIC MALE 24°H.T./BSP BANJO

代号 PART NO.	螺纹 THREADE		管子外径 TUBE O.D.		配用螺栓 BOLT	尺 寸 DIMENSIONS				
	E		D1			A	d	D	H	
1DL-14-B04	M14x1.5		6		720B-04	12	13.3	24	15	
1DL-16-B04	M16x1.5		8		720B-04	12	13.3	24	15	
1DL-18-B06	M18x1.5		10		720B-06	12	16.7	29	20	
1DL-20-B06	M20x1.5		12		720B-06	12	16.7	29	20	
1DL-22-B08	M22x1.5		14		720B-08	14	21	38	25	
1DL-24-B08	M24x1.5		16		720B-08	14	21	38	25	
1DL-30-B12	M30x2		20		720B-12	16	26.5	46	31	

备注:如需带卡套及卡套螺母整套订货,则请在代号后加"RN",如"1DL-20-B06/RN"（同上）
Remark:In case if you are interested to order the adapter in complete set with cutting ring and nut,it is necessary to insert suffix"RN" arter our part NO.,for example 1DL-20-B06/RN.（the same with above)

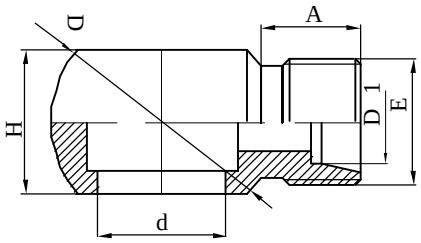

1CL

公制螺纹24°轻系列/公制螺纹铰接接头
METRIC MALE 24°L.T./METRIC BANJO

代号 PART NO.	螺纹 THREADE		管子外径 TUBE O.D.		配用螺栓 BOLT	尺 寸 DIMENSIONS				
	E		D1			A	d	D	H	
1CL-12-10	M12x1.5		6		700M-10	10	10	22	13	
1CL-14-12	M14x1.5		8		700M-12	11	12	22	12	
1CL-16-14	M16x1.5		10		700M-14	11	14	24	14	
1CL-18-16	M18x1.5		12		700M-16	11.5	16	28	18	
1CL-22-18	M22x1.5		15		700M-18	12.5	18	36	22	
1CL-26-22	M26x1.5		18		700M-22	12	22	46	30	

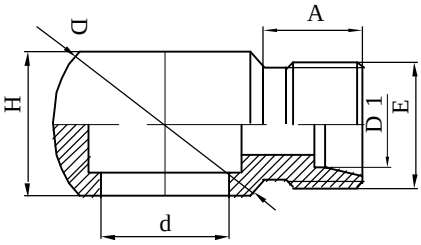

1DL

公制螺纹24°重系列/公制螺纹铰接接头
METRIC MALE 24°H.T./METRIC BANJO

代号 PART NO.	螺纹 THREADE		管子外径 TUBE O.D.		配用螺栓 BOLT	尺 寸 DIMENSIONS				
	E		D1			A	d	D	H	
1DL-14-12	M14x1.5		6		700M-12	12	12	22	12	
1DL-16-14	M16x1.5		8		700M-14	12	14	24	14	
1DL-18-16	M18x1.5		10		700M-16	12	16	28	18	
1DL-20-18	M20x1.5		12		700M-18	12	18	36	22	
1DL-22-18	M22x1.5		14		700M-18	14	20	36	22	
1DL-24-22	M24x1.5		16		700M-22	14	22	46	30	

备注:如需带卡套及卡套螺母整套订货,则请在代号后加"RN",如"1DL-22-18RN"（同上）
Remark:In case if you are interested to order the adapter in complete set with cutting ring and nut,it is necessary to insert suffix"RN" arter our part NO.,for example 1DL-22-18RN.（the same with above)

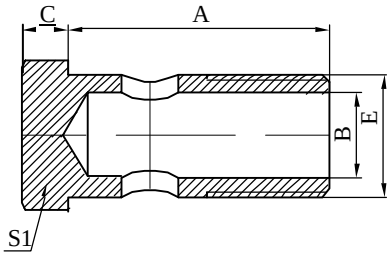

720B

英制铰接螺栓
BSP BOLT

代号 PART NO.	螺纹 THREADE					尺 寸 DIMENSIONS				
	E					A	B	C	S1	
720B-02	G1/8"-28					29.5	4.8	5	14	
720B-04	G1/4"-19					28.5	6	6	19	
720B-06	G3/8"-19					38.5	9	7	22	
720B-08	G1/2"-14					44	13	8.5	27	
720B-10	G5/8"-14					48.5	15	10	30	
720B-12	G3/4"-14					56	18	10	32	
720B-16	G1"-11					68.5	22	12.5	41	

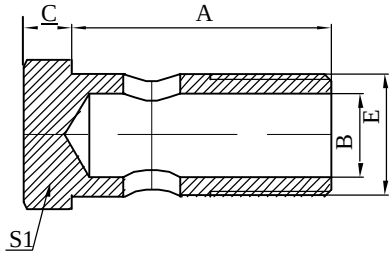

700M

公制铰接螺栓
METRIC BOLT

代号 PART NO.	螺纹 THREADE					尺 寸 DIMENSIONS				
	E					A	B	C	S1	
700M-10	M10x1					19	5	6	14	
700M-12	M12x1.5					24	6	6	17	
700M-14	M14x1.5					26	8	7	19	
700M-16	M16x1.5					28	9	7.5	22	
700M-18	M18x1.5					32	11	8	24	
700M-22	M22x1.5					39	14	9	27	
700M-26	M26x1.5					45	18	10	32	
700M-30	M30x2					51	22	11	38	

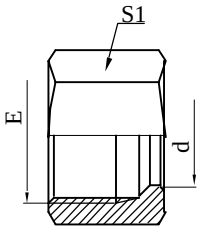

NL

卡套螺母轻系列
RETAINING NUTS L.T.

代号 PART NO.	螺纹 THREADE		管子外径 TUBE O.D.			尺 寸 DIMENSIONS				
	E		D1				d	S1		
NL-12	M12x1.5		6				6	14		
NL-14	M14x1.5		8				8	17		
NL-16	M16x1.5		10				10	19		
NL-18	M18x1.5		12				12	22		
NL-22	M22x1.5		15				15	27		
NL-26	M26x1.5		18				18	32		
NL-30	M30x2		22				22	36		
NL-33	M33x2		25				25	41		
NL-36	M36x2		28				28	41		
NL-52	M52x2		42				42	60		

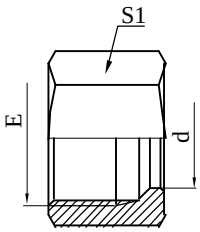

NS

卡套螺母重系列
RETAINING NUTS H.T.

代号 PART NO.	螺纹 THREADE		管子外径 TUBE O.D.			尺 寸 DIMENSIONS				
	E		D1				d	S1		
NS-14	M14x1.5		6				6	17		
NS-16	M16x1.5		8				8	19		
NS-18	M18x1.5		10				10	22		
NS-20	M20x1.5		12				12	24		
NS-22	M22x1.5		14				14	27		
NS-24	M24x1.5		16				16	30		
NS-30	M30x2		20				20	36		
NS-36	M36x2		25				25	46		
NS-52	M52x2		38				38	60		

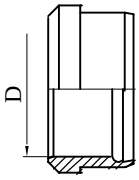

RL

卡套轻系列
CUTTING RING L.T.

代号 PART NO.			管子外径 TUBE O.D.							
			D1							
RL-06			6							
RL-08			8							
RL-10			10							
RL-12			12							
RL-15			15							
RL-18			18							
RL-22			22							
RL-28			28							
RL-35			35							
RL-42			42							

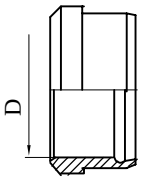

RS

卡套重系列
CUTTING RING H.T.

代号 PART NO.			管子外径 TUBE O.D.							
			D1							
RS-06			6							
RS-08			8							
RS-10			10							
RS-12			12							
RS-14			14							
RS-16			16							
RS-20			20							
RS-25			25							
RS-30			30							
RS-38			38							

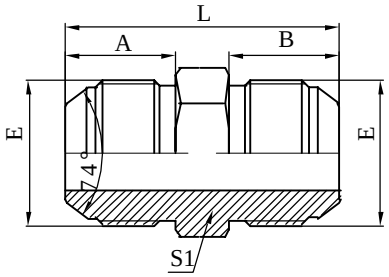

1Q

公制外螺纹74°外锥
METRIC MALE 74°CONE

代号 PART NO.	螺纹 THREADE					尺 寸 DIMENSIONS				
	E					A	B	S1		L
1Q-10	M10x1					12	12	12		30
1Q-12	M12x1.5					16	16	14		38
1Q-14	M14x1.5					17	17	17		40
1Q-16	M16x1.5					18	18	17		42
1Q-18	M18x1.5					18	18	19		42
1Q-22	M22x1.5					19.5	19.5	24		47
1Q-24	M24x1.5					20	20	27		49
1Q-27	M27x1.5					20	20	30		49
1Q-30	M30x1.5					23	23	32		56
1Q-30X2	M30x2					26	26	32		62
1Q-33	M33x2					26	26	36		63
1Q-36	M36x2					26	26	36		63
1Q-39	M39x2					26	26	41		64
1Q-42	M42x2					28.5	28.5	46		70
1Q-45	M45x2					28.5	28.5	46		70

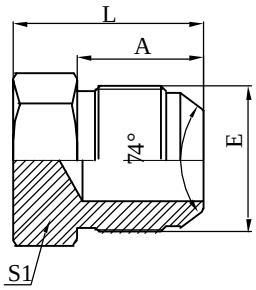

4Q

公制外螺纹74°外锥堵头
METRIC MALE 74°CONE PLUG

代号 PART NO.	螺纹 THREADE					尺 寸 DIMENSIONS				
	E					A		S1		L
4Q-10	M10x1					12		12		18
4Q-12	M12x1.5					16		14		22
4Q-14	M14x1.5					17		17		23
4Q-16	M16x1.5					18		17		24
4Q-18	M18x1.5					18		19		24
4Q-22	M22x1.5					19.5		24		27
4Q-24	M24x1.5					20		27		29
4Q-27	M27x1.5					20		30		29
4Q-30	M30x1.5					23		32		33
4Q-30E	M30x2					26		32		36
4Q-33	M33x2					26		36		37
4Q-36	M36x2					26		36		37
4Q-39	M39x2					26		41		38
4Q-42	M42x2					28.5		46		41.5
4Q-45	M45x2					28.5		46		41.5

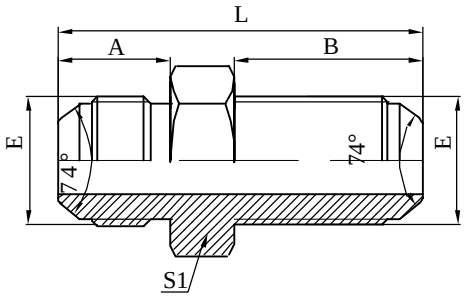

6Q

公制外螺纹74°外锥过板接头
METRIC MALE 74°CONE BULKHEAD

代号 PART NO.	螺纹 THREADE					尺 寸 DIMENSIONS				
	E					A	B	S1		L
6Q-10	M10x1					12	34	12		52
6Q-12	M12x1.5					16	38	14		60
6Q-14	M14x1.5					17	40	17		63
6Q-16	M16x1.5					18	41	17		65
6Q-18	M18x1.5					18	43	19		67
6Q-22	M22x1.5					19.5	44	24		71
6Q-24	M24x1.5					20	45	27		74
6Q-27	M27x1.5					20	48	30		77
6Q-30	M30x1.5					23	53	32		86
6Q-33	M33x2					26	55	36		92
6Q-36	M36x2					26	56	36		93
6Q-39	M39x2					26	58	41		96
6Q-42	M42x2					28.5	59	46		100.5
6Q-45	M45x2					28.5	60	46		101.5

备注:如需带锁母订货,则请在代号后加"LN",如6Q-18LN;
Remark:In case if you are interested to order the adapter with lock nut,please insert suffix"LN"after our part NO.,for example 6Q-18LN.

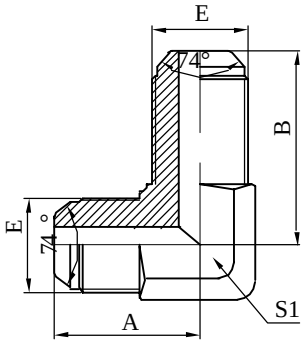

6Q9

90°公制外螺纹74°外锥过板接头
90°METRIC MALE 74°CONE BULKHEAD

代号 PART NO.	螺纹 THREADE					尺 寸 DIMENSIONS				
	E					A	B	S1		
6Q9-12	M12x1.5					25	56	11		
6Q9-14	M14x1.5					29	56	14		
6Q9-16	M16x1.5					30	58	17		
6Q9-18	M18x1.5					33	62	19		
6Q9-22	M22x1.5					37	64	22		
6Q9-27	M27x1.5					40	72	27		
6Q9-30	M30x1.5					40	72	27		
6Q9-33	M33x2					49	82	33		
6Q9-36	M36x2					46	82	33		
6Q9-39	M39x2					57	88	44		
6Q9-42	M42x2					57	88	44		
6Q9-45	M45x2					55	96	50		

备注:如需带锁母订货,则请在代号后加"LN",如6Q9-18LN;
Remark:In case if you are interested to order the adapter with lock nut,please insert suffix"LN"after our part NO.,for example 6Q9-18LN.

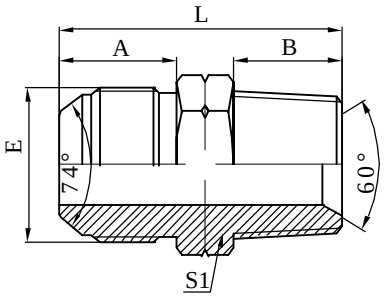

1QN

公制外螺纹74°外锥/布锥管外螺纹
METRIC MALE 74°CONE/NPT MALE

代号 PART NO.	螺纹 THREADE					尺 寸 DIMENSIONS				
	E	F				A	B	S1		L
1QN-12-02	M12x1.5	Z1/8"X27				16	10	14		32
1QN-12-04	M12x1.5	Z1/4"X18				16	14	14		36
1QN-14-02	M14x1.5	Z1/8"X27				17	10	17		33
1QN-14-04	M14x1.5	Z1/4"X18				17	14	17		37
1QN-16-04	M16x1.5	Z1/4"X18				18	14	17		38
1QN-16-06	M16x1.5	Z3/8"X18				18	14	17		38
1QN-18-04	M18x1.5	Z1/4"X18				18	14	19		38
1QN-18-06	M18x1.5	Z3/8"X18				18	14	19		38
1QN-18-08	M18x1.5	Z1/2"X14				18	19	22		44
1QN-22-06	M22x1.5	Z3/8"X18				19.5	14	24		41
1QN-22-08	M22x1.5	Z1/2"X14				19.5	19	24		46
1QN-27-06	M27x1.5	Z3/8"X18				20	14	30		43
1QN-27-08	M27x1.5	Z1/2"X14				20	19	30		48
1QN-27-12	M27x1.5	Z3/4"X14				20	19.5	30		48.5
1QN-27-16	M27x1.5	Z1"X11.5				20	24	36		55
1QN-30-12	M30x2	Z3/4"X14				23	19.5	32		52.5
1QN-33-12	M33x2	Z3/4"X14				26	19.5	36		56.5
1QN-36-16	M36x2	Z1"X11.5				25	24	41		61
1QN-39-16	M39x2	Z1"X11.5				26	24	41		62
1QN-45-16	M45x2	Z1"X11.5				28.5	24	46		65.5
1QN-45-20	M45x2	Z1.1/4"X11.5				28.5	25	46		66.5
1QN-45-24	M45x2	Z1.1/2"X11.5				28.5	25	50		70.5
1QN-52-20	M52x2	Z1.1/4"X11.5				30	25	55		72

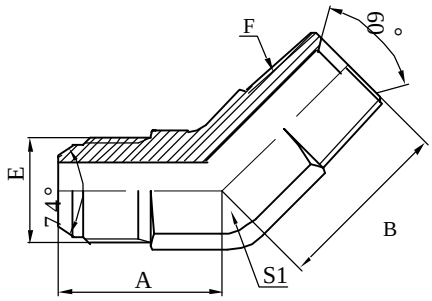

1QN4

45°公制外螺纹74°外锥/布锥管外螺纹
45°METRIC MALE 74°CONE/NPT MALE

代号 PART NO.	螺纹 THREADE					尺 寸 DIMENSIONS				
	E	F				A	B	S1		
1QN4-12-02	M12x1.5	Z1/8"X27				20	20	11		
1QN4-14-02	M14x1.5	Z1/8"X27				22	22	14		
1QN4-14-04	M14x1.5	Z1/4"X18				22	22	14		
1QN4-16-06	M16x1.5	Z3/8"X18				22	22	17		
1QN4-18-06	M18x1.5	Z3/8"X18				24	24	19		
1QN4-22-08	M22x1.5	Z1/2"X14				27	27	22		
1QN4-27-08	M27x1.5	Z1/2"X14				33	33	27		
1QN4-27-12	M27x1.5	Z3/4"X14				33	33	27		
1QN4-30-12	M30x1.5	Z3/4"X14				37	37	33		
1QN4-36-16	M36x2	Z1"X11.5				37	37	33		
1QN4-39-16	M39x2	Z1"X11.5				40	40	44		
1QN4-42-20	M42x2	Z1.1/4"X11.5				40	40	44		

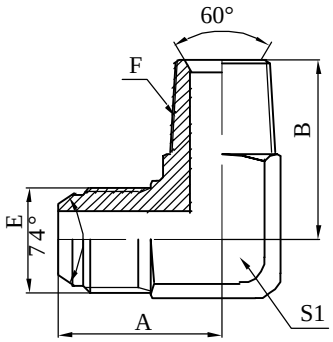

1QN9

90°公制外螺纹74°外锥/布锥管外螺纹
90°METRIC MALE 74°CONE/NPT MALE

代号 PART NO.	螺纹 THREADE					尺 寸 DIMENSIONS				
	E	F				A	B	S1		
1QN9-12-02	M12x1.5	Z1/8"X27				25	25	11		
1QN9-12-04	M12x1.5	Z1/4"X18				29	27	14		
1QN9-14-02	M14x1.5	Z1/8"X27				29	27	14		
1QN9-14-04	M14x1.5	Z1/4"X18				29	27	14		
1QN9-16-04	M16x1.5	Z1/4"X18				30	28	17		
1QN9-16-06	M16x1.5	Z3/8"X18				30	28	17		
1QN9-16-08	M16x1.5	Z1/2"X14				37	37	22		
1QN9-18-04	M18x1.5	Z1/4"X18				33	33	19		
1QN9-18-06	M18x1.5	Z3/8"X18				33	33	19		
1QN9-22-06	M22x1.5	Z3/8"X18				37	37	22		
1QN9-22-08	M22x1.5	Z1/2"X14				37	37	22		
1QN9-27-08	M27x1.5	Z1/2"X14				41	41	27		
1QN9-27-12	M27x1.5	Z3/4"X14				41	41	27		
1QN9-27-16	M27x1.5	Z1"X11.5				49	49	33		
1QN9-30-12	M30x1.5	Z3/4"X14				40	40	27		
1QN9-36-16	M36x2	Z1"X11.5				46	46	33		
1QN9-39-16	M39x2	Z1"X11.5				57	57	44		
1QN9-42-20	M42x2	Z1.1/4"X11.5				57	57	44		
1QN9-45-16	M45x2	Z1"X11.5				55	55	44		
1QN9-45-20	M45x2	Z1.1/4"X11.5				55	55	44		
1QN9-45-24	M45x2	Z1.1/2"X11.5				60	57	55		

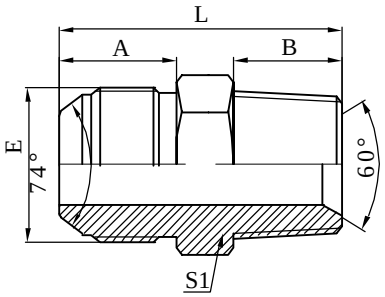

1QT

公制外螺纹74°外锥/英锥管外螺纹
METRIC MALE 74°CONE/BSPT MALE

代号 PART NO.	螺纹 THREADE					尺 寸 DIMENSIONS				
	E	F				A	B	S1		L
1QT-12-02	M12x1.5	R1/8"X28				16	10	14		32
1QT-12-04	M12x1.5	R1/4"X19				16	14	14		36
1QT-14-02	M14x1.5	R1/8"X28				17	10	17		33
1QT-14-04	M14x1.5	R1/4"X19				17	14	17		37
1QT-16-04	M16x1.5	R1/4"X19				18	14	19		38
1QT-16-06	M16x1.5	R3/8"X19				18	14	19		38
1QT-18-04	M18x1.5	R1/4"X19				18	14	19		38
1QT-18-06	M18x1.5	R3/8"X19				18	14	19		38
1QT-18-08	M18x1.5	R1/2"X14				18	19	22		44
1QT-22-06	M22x1.5	R3/8"X19				19.5	14	24		41
1QT-22-08	M22x1.5	R1/2"X14				19.5	19	24		46
1QT-27-06	M27x1.5	R3/8"X19				20	14	30		43
1QT-27-08	M27x1.5	R1/2"X14				20	19	30		48
1QT-27-12	M27x1.5	R3/4"X14				20	19.5	30		48.5
1QT-27-16	M27x1.5	R1"X11				20	24	36		55
1QT-30-12	M30x2	R3/4"X14				23	19.5	32		52.5
1QT-33-12	M33x2	R3/4"X14				26	19.5	36		56.5
1QT-36-16	M36x2	R1"X11				25	24	41		61
1QT-39-16	M39x2	R1"X11				26	24	41		62
1QT-45-16	M45x2	R1"X11				28.5	24	46		65.5
1QT-45-20	M45x2	R1.1/4"X11				28.5	25	46		66.5
1QT-45-24	M45x2	R1.1/2"X11				28.5	25	50		70.5
1QT-52-20	M52x2	R1.1/4"X11				30	25	55		72

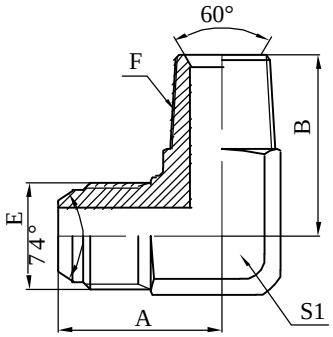

1QT9

90°公制外螺纹74°外锥/英锥管外螺纹
90°METRIC MALE 74°CONE/BSPT MALE

代号 PART NO.	螺纹 THREADE					尺 寸 DIMENSIONS				
	E	F				A	B	S1		
1QT9-12-02	M12x1.5	R1/8"X28				25	25	11		
1QT9-12-04	M12x1.5	R1/4"X19				29	27	14		
1QT9-14-02	M14x1.5	R1/8"X28				29	27	14		
1QT9-14-04	M14x1.5	R1/4"X19				29	27	14		
1QT9-16-04	M16x1.5	R1/4"X19				30	28	17		
1QT9-16-06	M16x1.5	R3/8"X19				30	28	17		
1QT9-16-08	M16x1.5	R1/2"X14				37	37	22		
1QT9-18-04	M18x1.5	Z1/4"X19				33	33	19		
1QT9-18-06	M18x1.5	R3/8"X19				33	33	19		
1QT9-22-06	M22x1.5	R3/8"X19				37	37	22		
1QT9-22-08	M22x1.5	R1/2"X14				37	37	22		
1QT9-27-08	M27x1.5	R1/2"X14				41	41	27		
1QT9-27-12	M27x1.5	R3/4"X14				41	41	27		
1QT9-27-16	M27x1.5	R1"X11				49	49	33		
1QT9-30-12	M30x1.5	R3/4"X14				40	40	27		
1QT9-36-16	M36x2	R1"X11				46	46	33		
1QT9-39-16	M39x2	R1"X11				57	57	44		
1QT9-42-20	M42x2	R1.1/4"X11				57	57	44		
1QT9-45-16	M45x2	R1"X11				55	55	44		
1QT9-45-20	M45x2	R1.1/4"X11				55	55	44		
1QT9-45-24	M45x2	R1.1/2"X11				60	57	55		

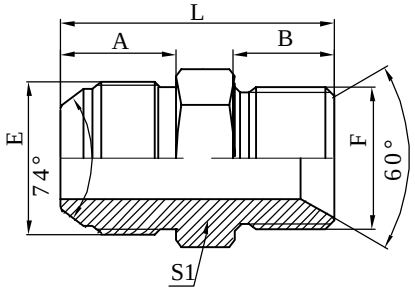

1QB

公制外螺纹74°外锥/英管外螺纹
60°内锥或六角端面组合垫密封
METRIC MALE 74°CONE/BSP MALE
DOUBLE FOR 60°SEAT BONDED SEAL

代号 PART NO.	螺纹 THREADE					尺 寸 DIMENSIONS				
	E	F				A	B	S1		L
1QB-12-02	M12x1.5	G1/8"X28				16	10	14		32
1QB-14-04	M14x1.5	G1/4"X19				17	12	19		35
1QB-16-06	M16x1.5	G3/8"X19				18	13.5	22		39
1QB-18-06	M18x1.5	G3/8"X19				18	13.5	22		39
1QB-22-08	M22x1.5	G1/2"X14				19.5	16	27		44
1QB-24-10	M24x1.5	G5/8"X14				20	17.5	30		46.5
1QB-27-12	M27x1.5	G3/4"X14				20	18.5	32		48.5
1QB-30-12	M30x1.5	G3/4"X14				23	18.5	32		51.5
1QB-30E-12	M30x2	G3/4"X14				26	18.5	32		54.5
1QB-33-16	M33x2	G1"X11				26	20.5	41		58.5
1QB-39-16	M39x2	G1"X11				26	20.5	41		58.5
1QB-45-20	M45x2	G1.1/4"X11				28.5	20.5	50		66

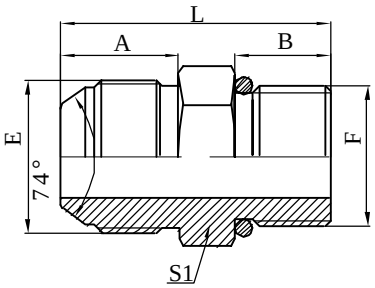

1QG

公制74°外锥/英管外螺纹O型圈
METRIC 74°CONE/BSP MALE O-RING

代号 PART NO.	螺纹 THREADE					尺 寸 DIMENSIONS				
	E	F				A	B	S1		L
1QG-14-04	M14x1.5	G1/4"X19				17	12	17		35
1QG-16-06	M16x1.5	G3/8"X19				18	13.5	22		39
1QG-18-06	M18x1.5	G3/8"X19				18	13.5	22		39
1QG-18-08	M18x1.5	G1/2"X14				18	16	27		43
1QG-22-08	M22x1.5	G1/2"X14				19.5	16	27		44
1QG-27-12	M27x1.5	G3/4"X14				20	18.5	32		48.5
1QG-30-12	M30x1.5	G3/4"X14				23	18.5	32		51.5
1QG-39-16	M39x2	G1"X11				26	20.5	41		58.5
1QG-45-20	M45x2	G1.1/4"X11				28.5	20.5	50		66

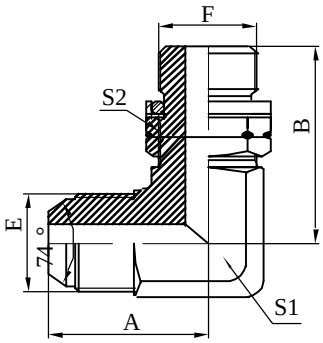

1QG9-OG

90°公制74°外锥/
英管外螺纹O型圈可调向柱端
90°METRIC 74°CONE/
BSP MALE O-RING ADJUSTABLE STUD

代号 PART NO.	螺纹 THREADE					尺 寸 DIMENSIONS				
	E	F				A	B	S1	S2	
1QG9-14-04OG	M14x1.5	G1/4"X19				27	31.3	14	19	
1QG9-16-06OG	M16x1.5	G3/8"X19				29	35.8	17	22	
1QG9-18-06OG	M18x1.5	G3/8"X19				32	36.8	19	22	
1QG9-18-08OG	M18x1.5	G1/2"X14				32	43.2	19	27	
1QG9-22-08OG	M22x1.5	G1/2"X14				37	43.2	22	27	
1QG9-27-12OG	M27x1.5	G3/4"X14				41	49.3	27	32	
1QG9-30-12OG	M30x1.5	G3/4"X14				40	52	27	32	
1QG9-39-16OG	M39x2	G1"X11				57	58	44	41	
1QG9-45-20OG	M45x2	G1.1/4"X11				55	63	44	50	

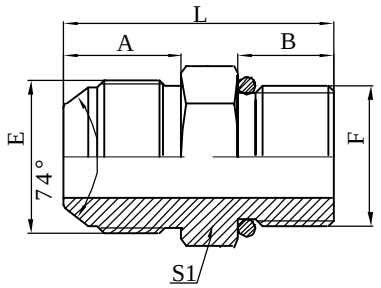

1QH

公制74°外锥/公制外螺纹
METRIC 74°CONE/METRIC MALE

代号 PART NO.	螺纹 THREADE					尺 寸 DIMENSIONS				
	E	F				A	B	S1		L
1QH-14-12	M14x1.5	M12x1.5				17	11	17		34
1QH-16-14	M16x1.5	M14x1.5				18	11	19		35
1QH-18-16	M18x1.5	M16x1.5				18	11	22		36
1QH-22-18	M22x1.5	M18x1.5				19.5	11	24		38
1QH-27-22	M27x1.5	M22x1.5				20	12	27		41
1QH-30-27	M30x1.5	M27x1.5				23	13	32		46
1QH-33-27	M33x2	M27x1.5				26	13	32		49

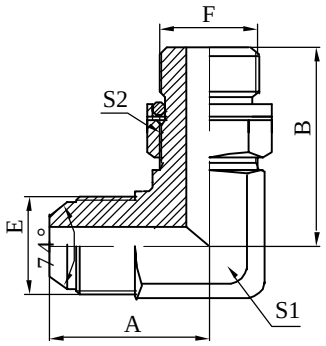

1QH9-OG

90°公制74°外锥/
公制外螺纹可调向柱端
90°METRIC 74°CONE/
METRIC MALE ADJUSTABLE STUD

代号 PART NO.	螺纹 THREADE					尺 寸 DIMENSIONS				
	E	F				A	B	S1	S2	
1QH9-14-12OG	M14x1.5	M12x1.5				27	32	14	17	
1QH9-16-14OG	M16x1.5	M14x1.5				29	35.5	17	19	
1QH9-18-16OG	M18x1.5	M16x1.5				32	36	19	22	
1QH9-22-18OG	M22x1.5	M18x1.5				37	39.5	22	24	
1QH9-27-22OG	M27x1.5	M22x1.5				41	43.5	27	27	
1QH9-30-27OG	M30x1.5	M27x1.5				40	50	27	32	
1QH9-33-27OG	M33x2	M27x1.5				49	52	33	32	
1QH9-36-33OG	M36x2	M33x2				49	54	33	41	
1QH9-39-33OG	M39x2	M33x2				57	57.2	44	41	
1QH9-45-42OG	M45x2	M42x2				55	61	44	50	

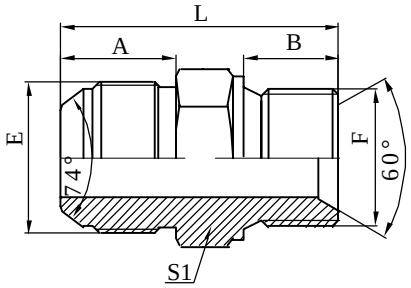

1QM

公制外螺纹74°外锥/公制外螺纹
60°内锥或六角端面组合垫密封
METRIC MALE 74°CONE/METRIC MALE
DOUBLE FOR 60°SEAT BONDED SEAL

代号 PART NO.	螺纹 THREADE					尺 寸 DIMENSIONS				
	E	F				A	B	S1		L
1QM-12	M12x1.5	M12x1.5				16	10	17		34
1QM-14	M14x1.5	M14x1.5				17	11	19		36
1QM-14-12	M14x1.5	M12x1.5				17	10	17		35
1QM-14-16	M14x1.5	M16x1.5				17	12	22		38
1QM-16	M16x1.5	M16x1.5				18	12	22		39
1QM-16-14	M16x1.5	M14x1.5				18	11	19		37
1QM-18	M18x1.5	M18x1.5				18	12	24		40
1QM-18-16	M18x1.5	M16x1.5				18	12	22		39
1QM-22	M22x1.5	M22x1.5				19.5	14	27		44.5
1QM-22-18	M22x1.5	M18x1.5				19.5	12	24		39

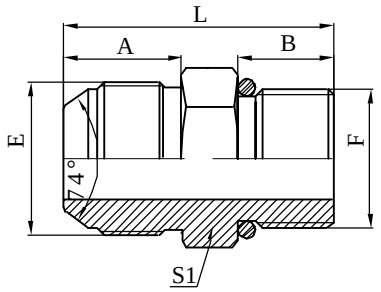

1QO

公制外螺纹74°外锥/
SAE外螺纹O型圈
METRIC MALE74°CONE/
SAE MALE O-RING

代号 PART NO.	螺纹 THREADE					尺 寸 DIMENSIONS				
	E	F				A	B	S1		L
1QO-16-06	M16x1.5	U9/16"X18				18	12	17		36
1QO-18-08	M18x1.5	U3/4"X16				18	12	22		37
1QO-22-10	M22x1.5	U7/8"X14				19.5	13.5	27		42
1QO-27-12	M27x1.5	U1.1/16"X12				20	16	32		46
1QO-30-12	M30x1.5	U1.1/16"X12				23	16	32		49
1QO-33-16	M33x2	U1.5/16"X12				26	17	41		55
1QO-39-16	M39x2	U1.5/16"X12				26	17	41		55
1QO-42-20	M42x2	U1.5/8"X12				28.5	18	50		63.5

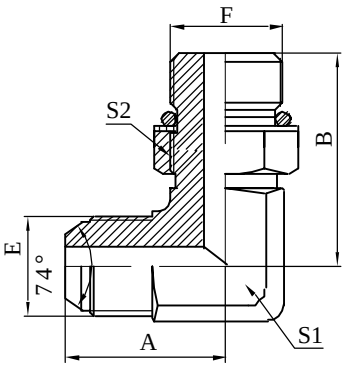

1QO9-OG

90公制外螺纹74°外锥/
SAE外螺纹O型圈
90°METRIC MALE74°CONE/
SAE MALE O-RING ADJUSTABLE STUD

代号 PART NO.	螺纹 THREADE					尺 寸 DIMENSIONS				
	E	F				A	B	S1	S2	
1QO9-16-06OG	M16x1.5	U9/16"X18				30	31.8	17	19	
1QO9-18-08OG	M18x1.5	U3/4"X16				37	36.8	22	24	
1QO9-22-10OG	M22x1.5	U7/8"X14				37	44	22	27	
1QO9-27-12OG	M27x1.5	U1.1/16"X12				41	51	27	32	
1QO9-30-12OG	M30x1.5	U1.1/16"X12				40	53	27	32	
1QO9-33-16OG	M33x2	U1.5/16"X12				49	54.5	33	41	
1QO9-39-16OG	M39x2	U1.5/16"X12				49	59.5	44	41	
1QO9-42-20OG	M42x2	U1.5/8"X12				49	59	44	50	

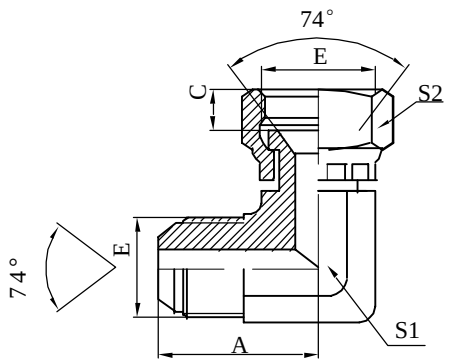

2Q9

90°公制外螺纹74°外锥/
公制内螺纹74°内锥
90°METRIC MALE 74°CONE/
METRIC FEMALE 74°SEAT

代号 PART NO.	螺纹 THREADE					尺 寸 DIMENSIONS				
	E					A	C	S1	S2	
2Q9-14	M14x1.5					29	9	14	19	
2Q9-16	M16x1.5					30	9.5	17	22	
2Q9-18	M18x1.5					33	9.5	19	24	
2Q9-22	M22x1.5					37	10	22	27	
2Q9-27	M27x1.5					41	10.5	27	32	
2Q9-30	M30x1.5					40	11.5	27	36	
2Q9-33	M33x2					49	14.5	33	41	
2Q9-36	M36x2					46	13.5	33	41	
2Q9-39	M39x2					57	13.5	44	46	
2Q9-45	M52x2					55	15.5	44	55	

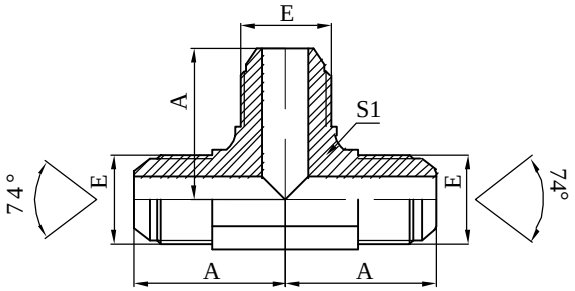

AQ

公制外螺纹74°外锥三通
METRIC MALE 74 °CONE TEE

代号 PART NO.	螺纹 THREADE					尺 寸 DIMENSIONS				
	E					A		S1		
AQ-14	M14x1.5					27		14		
AQ-16	M16x1.5					29		17		
AQ-18	M18x1.5					32		19		
AQ-22	M22x1.5					33		22		
AQ-27	M27x1.5					40		27		
AQ-30	M30x1.5					40		27		
AQ-33	M33x2					49		33		

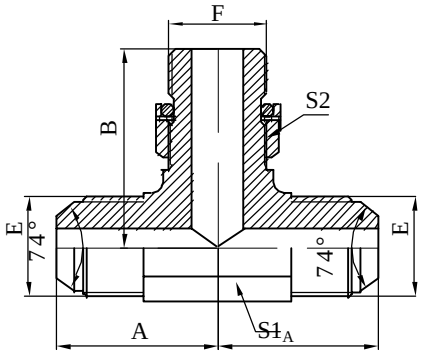

AQHQ-OG

公制外螺纹74°外锥/
可调向柱端分支三通
METRIC MALE74°CONE/
ADJUSTABLE STUD BRANCH TEE

代号 PART NO.	螺纹 THREADE				O型圈 O-RING	尺 寸 DIMENSIONS				
	E	F				A	B	S1	S2	
AQHQ-14-12-14OG	M14x1.5	M12x1.5			9.3x2.4	27	32	14	17	
AQHQ-16-14-16OG	M16x1.5	M14x1.5			11.3x2.4	29	35.5	17	19	
AQHQ-18-16-18OG	M18x1.5	M16x1.5			13.3x2.4	32	36	19	22	
AQHQ-22-18-22OG	M22x1.5	M18x1.5			15.3x2.4	33	39.5	22	24	
AQHQ-27-22-27OG	M27x1.5	M22x1.5			19.3x2.4	40	43.5	27	27	
AQHQ-30-27-30OG	M30x1.5	M27x1.5			23.5x3	40	50	27	32	
AQHQ-33-27-33OG	M33x2	M27x1.5			23.5x3	49	52	33	32	
AQHQ-36-33-36OG	M36x2	M33x2			29.5x3	46	54	33	41	
AQHQ-39-33-39OG	M39x2	M33x2			29.5x3	57	57.2	44	41	

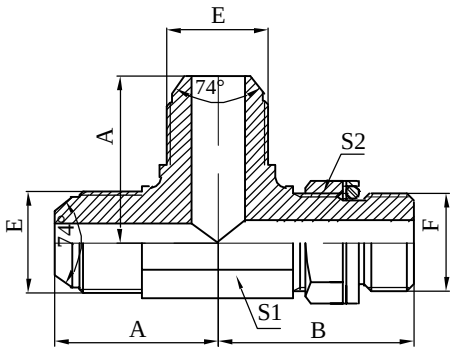

AQQH-OG

公制外螺纹74°外锥/
可调向柱端主支三通
METRIC MALE74°CONE/
ADJUSTABLE STUD RUN TEE

代号 PART NO.	螺纹 THREADE				O型圈 O-RING	尺 寸 DIMENSIONS				
	E	F				A	B	S1	S2	
AQQH-14-14-12OG	M14x1.5	M12x1.5			9.3x2.4	27	32	14	17	
AQQH-16-16-14OG	M16x1.5	M14x1.5			11.3x2.4	29	35.5	17	19	
AQQH-18-18-16OG	M18x1.5	M16x1.5			13.3x2.4	32	36	19	22	
AQQH-22-22-18OG	M22x1.5	M18x1.5			15.3x2.4	33	39.5	22	24	
AQQH-27-27-22OG	M27x1.5	M22x1.5			19.3x2.4	40	43.5	27	27	
AQQH-30-30-27OG	M30x1.5	M27x1.5			23.5x3	40	50	27	32	
AQQH-33-33-27OG	M33x2	M27x1.5			23.5x3	49	52	33	32	
AQQH-36-36-33OG	M36x2	M33x2			29.5x3	36	54	33	41	
AQQH-39-39-33OG	M39x2	M33x2			29.5x3	57	57.2	44	41	

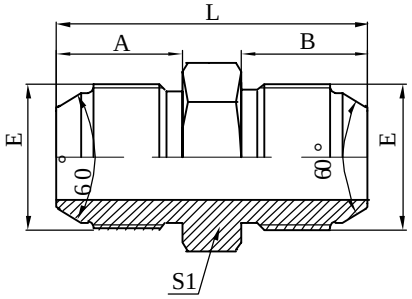

1K

日本公制外螺纹60°外锥
JIS METRIC MALE60° CONE

代号 PART NO.	螺纹 THREADE					尺 寸 DIMENSIONS				
	E					A	B	S1		L
1K-14	M14x1.5					17	17	17		40
1K-16	M16x1.5					18	18	17		42
1K-18	M18x1.5					18	18	19		42
1K-20	M20x1.5					20	20	22		47
1K-22	M22x1.5					20	20	24		48
1K-24	M24x1.5					21.5	21.5	27		52
1K-30	M30x1.5					26	26	32		62
1K-33	M33x1.5					30	30	36		71
1K-36	M36x1.5					33	33	41		78
1K-42	M42x1.5					36	36	46		85

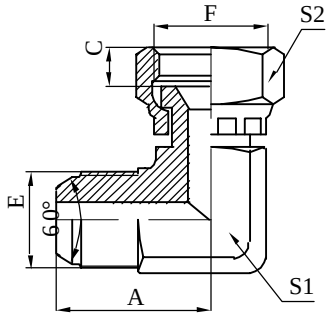

2K9

90°日本公制螺纹60°外锥
90°JIS METRIC MALE60° CONE

代号 PART NO.	螺纹 THREADE					尺 寸 DIMENSIONS				
	E	F				A	C	S1	S2	
2K9-14	M14x1.5	M14x1.5				29	12	14	19	
2K9-16	M16x1.5	M16x1.5				30	9.5	17	22	
2K9-18	M18x1.5	M18x1.5				33	11	19	24	
2K9-22	M22x1.5	M22x1.5				37	14	22	27	
2K9-24	M24x1.5	M24x1.5				37	13.5	24	32	
2K9-30-24	M30x1.5	M24x1.5				40	13.5	27	32	
2K9-30	M30x1.5	M30x1.5				40	20	27	36	
2K9-33	M33x1.5	M33x1.5				49	20.5	33	41	

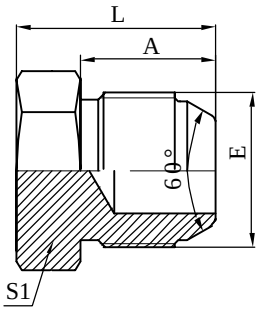

4K

日本公制外螺纹60°外锥堵头
JIS METRIC MALE60° CONE PLUG

代号 PART NO.	螺纹 THREADE					尺 寸 DIMENSIONS				
	E					A		S1		L
4K-14	M14x1.5					17		14		23
4K-16	M16x1.5					18		17		24
4K-18	M18x1.5					18		19		24
4K-20	M20x1.5					20		22		27
4K-22	M22x1.5					20		24		28
4K-24	M24x1.5					21.5		27		30
4K-30	M30x1.5					26		32		36
4K-33	M33x1.5					30		36		41

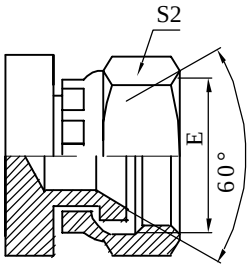

9K

日本公制内螺纹内锥60°
JIS METRIC FEMALE 60°SEAT PLUG

代号 PART NO.	螺纹 THREADE					尺 寸 DIMENSIONS				
	E						C	S1	S2	
9K-14	M14x1.5						12	19	19	
9K-16	M16x1.5						9.5	19	22	
9K-18	M18x1.5						11	24	24	
9K-22	M22x1.5						14	27	27	
9K-24	M24x1.5						13.5	32	32	
9K-30	M30x1.5						20	36	36	
9K-33	M33x1.5						20.5	41	41	

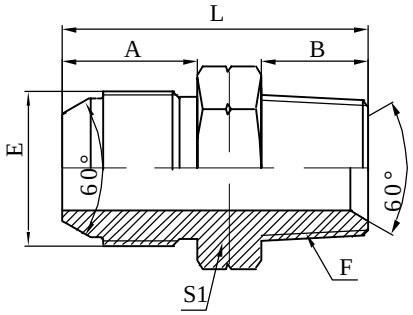

1KN

日本公制外螺纹60°外锥/布锥管外螺纹
JIS METRIC MALE 60 °CONE/NPT MALE

代号 PART NO.	螺纹 THREADE					尺 寸 DIMENSIONS				
	E	F				A	B	S1	L	
1KN-14-04	M14x1.5	Z1/4"X18				17	14	14	37	
1KN-14-06	M14x1.5	Z3/8"X18				17	14	17	37	
1KN-16-06	M16x1.5	Z3/8"X18				18	14	17	38	
1KN-18-06	M18x1.5	Z3/8"X18				18	14	19	38	
1KN-20-06	M20x1.5	Z3/8"X18				20	14	22	41	
1KN-22-06	M22x1.5	Z3/8"X18				20	14	24	42	
1KN-22-08	M22x1.5	Z1/2"X14				20	19	24	47	
1KN-24-12	M24x1.5	Z3/4"X14				21.5	19.5	27	50	
1KN-30-12	M30x1.5	Z3/4"X14				26	19.5	32	55.5	
1KN-33-16	M33x1.5	Z1"X11.5				30	24	36	65	
1KN-36-20	M36x1.5	Z1.1/4"X11.5				33	25	46	71	
1KN-42-24	M42x1.5	Z1.1/2"X11.5				36	25	50	78	

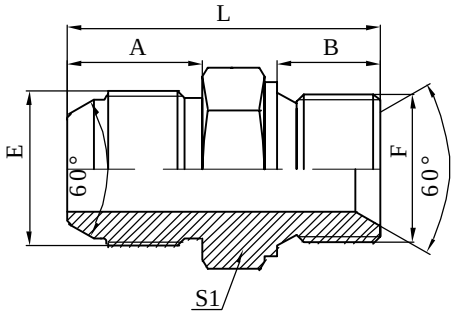

1KM

日本公制外螺纹60°外锥/
公制外螺纹60°锥封或组合垫圈
JIS METRIC MALE60° CONE/
METRIC MALE 60° CONE BONDED SEAL

代号 PART NO.	螺纹 THREADE					尺 寸 DIMENSIONS				
	E	F				A	B	S1	L	
1KM-14-12	M14x1.5	M12x1.5				17	10	17	35	
1KM-14	M14x1.5	M14x1.5				17	11	19	36	
1KM-22-16	M22x1.5	M16x1.5				20	12	22	41	
1KM-22-18	M22x1.5	M18x1.5				20	12	24	42	
1KM-22	M22x1.5	M22x1.5				20	14	27	45	

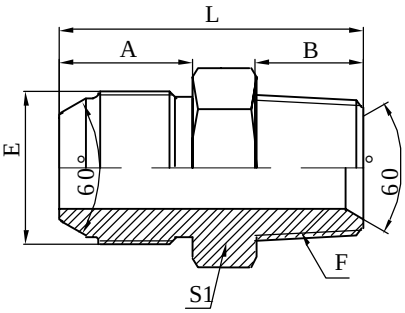

1KT

日本公制外螺纹60 °/英锥管外螺纹
JIS METRIC MALE60°CONE/BSPT MALE

代号 PART NO.	螺纹 THREADE					尺 寸 DIMENSIONS				
	E	F				A	B	S1	L	
1KT-14-04	M14x1.5	R1/4"X19				17	14	17	37	
1KT-16-06	M16x1.5	R3/8"X19				18	14	19	38	
1KT-18-06	M18x1.5	R3/8"X19				18	14	19	38	
1KT-22-06	M22x1.5	R3/8"X19				20	14	24	42	
1KT-22-08	M22x1.5	R1/2"X14				20	19	24	47	
1KT-30-12	M30x1.5	R3/4"X14				26	19.5	32	55.5	
1KT-33-16	M33x1.5	R1"X11				30	24	36	65	
1KT-36-20	M36x1.5	R1.1/4"X11				33	25	46	71	
1KT-42-24	M42x1.5	R1.1/2"X11				36	25	50	78	

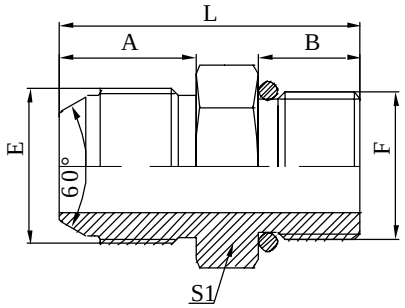

1K

日本公制外螺纹60°外锥/
公制外螺纹重系列
JIS METRIC MALE60°
CONE/METRIC MALE S-SERIES

代号 PART NO.	螺纹 THREADE					尺 寸 DIMENSIONS				
	E	F				A	B	S1		L
1KH-14-12	M14x1.5	M12x1.5				17	11	17		34
1KH-14	M14x1.5	M14x1.5				17	11	19		34
1KH-16-14	M16x1.5	M14x1.5				18	11	19		35
1KH-18-14	M18x1.5	M14x1.5				18	11	19		35
1KH-18-16	M18x1.5	M16x1.5				18	11	22		36
1KH-18-20	M18x1.5	M20x1.5				18	12	27		39
1KH-20-18	M20x1.5	M18x1.5				20	11	24		39
1KH-22-20	M22x1.5	M20x1.5				20	12	27		41
1KH-24-20	M24x1.5	M20x1.5				21.5	12	27		42
1KH-24-22	M24x1.5	M22x1.5				21.5	12	27		42
1KH-30-27	M30x1.5	M27x1.5				26	13	32		49

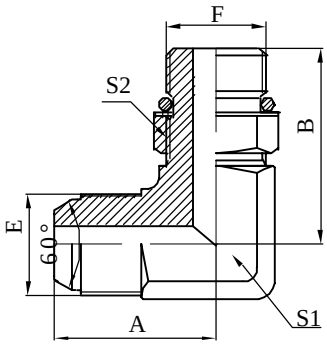

1KH9-OG

90°日本公制外螺纹60°外锥/
公制外螺纹可调向柱端
90°JIS METRIC MALE 60°CONE/
METRIC ALE ADJUSTABLE STUD

代号 PART NO.	螺纹 THREADE				O型圈 O-RING	尺 寸 DIMENSIONS				
	E	F				A	B	S1	S2	
1KH9-14-12OG	M14x1.5	M12x1.5			9.3x2.4	27	33.5	14	17	
1KH9-14OG	M14x1.5	M14x1.5			11.3x2.4	27	34.5	14	19	
1KH9-16-14OG	M16x1.5	M14x1.5			11.3x2.4	29	35.5	17	19	
1KH9-18-14OG	M18x1.5	M14x1.5			11.3x2.4	32	37.5	19	19	
1KH9-18-16OG	M18x1.5	M16x1.5			13.3x2.4	32	39.5	19	22	
1KH9-18-20OG	M18x1.5	M20x1.5			17.3x2.4	37	44	22	27	
1KH9-20-18OG	M20x1.5	M18x1.5			15.3x2.4	37	42.5	22	24	
1KH9-22-20OG	M22x1.5	M20x1.5			17.3x2.4	37	45.5	22	27	
1KH9-24-20OG	M24x1.5	M20x1.5			17.3x2.4	37	47	24	27	
1KH9-24-22OG	M24x1.5	M22x1.5			19.3x2.4	37	47	24	27	
1KH9-30-27OG	M30x1.5	M27x1.5			23.5x3	40	57	27	32	
1KH9-33OG	M33x1.5	M33x1.5			29.5x3	49	59	33	41	
1KH9-36-33OG	M36x1.5	M33x1.5			29.5x3	46	60.5	33	41	

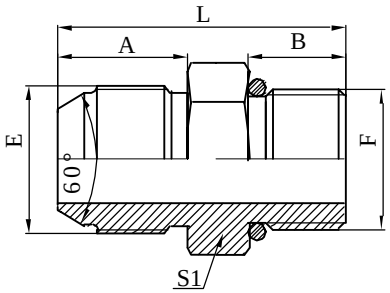

1KG

日本公制外螺纹60 °锥/
英管外螺纹O型圈
JIS METRIC MALE 60 °CONE/
BSP MALE O-RING

代号 PART NO.	螺纹 THREADE					尺 寸 DIMENSIONS				
	E	F				A	B	S1	L	
1KG-14-04	M14x1.5	G1/4"X19				17	12	19	35	
1KG-14-06	M14x1.5	G3/8"X19				17	13.5	22	38	
1KG-16-06	M16x1.5	G3/8"X19				18	13.5	22	39	
1KG-18-06	M18x1.5	G3/8"X19				18	13.5	22	39	
1KG-22-08	M22x1.5	G1/2"X14				20	16	27	45	
1KG-30-12	M30x1.5	G3/4"X14				26	18.5	32	54.5	
1KG-33-12	M33x1.5	G3/4"X14				30	18.5	36	59.5	
1KG-33-16	M33x1.5	G1"X11				30	20.5	41	62.5	

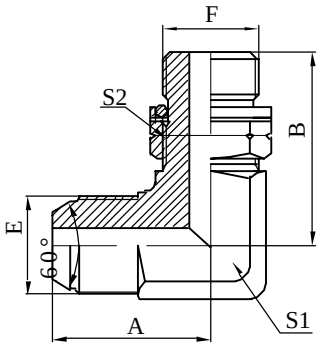

1KG9-OG

90 °\u26085X本公制外螺纹60°/
英管外螺纹O型圈可调向柱端
90 °JIS MERIC MALE/
BSP MALE O-RING ADJUSTABLE STUD

代号 PART NO.	螺纹 THREADE					尺 寸 DIMENSIONS				
	E	F				A	B	S1	S2	
1KG9-14-04OG	M14x1.5	G1/4"X19				29	31.3	14	19	
1KG9-14-06OG	M14x1.5	G3/8"X19				30	35.8	17	22	
1KG9-16-06OG	M16x1.5	G3/8"X19				30	35.8	17	22	
1KG9-18-06OG	M18x1.5	G3/8"X19				33	37	19	22	
1KG9-22-08OG	M22x1.5	G1/2"X14				37	43.2	22	27	
1KG9-24-08OG	M24x1.5	G1/2"X14				37	46	24	27	
1KG9-24-12OG	M24x1.5	G3/4"X14				41	49.3	27	32	
1KG9-30-12OG	M30x1.5	G3/4"X14				40	53	27	32	
1KG9-33-16OG	M33x1.5	G1"X11				49	53	33	41	
1KG9-42-20OG	M42x1.5	G1.1/4"X11				57	59	44	50	

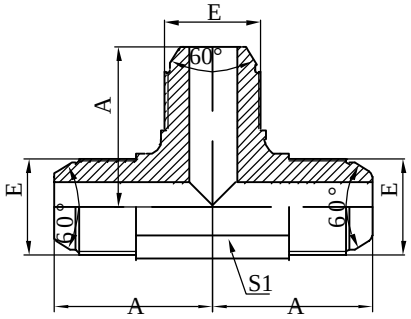

AK

日本公制外螺纹60°外锥三通
JIS METRIC MALE60° CONE TEE

代号 PART NO.	螺纹 THREADE					尺 寸 DIMENSIONS				
	E					A		S1		
AK-14	M14x1.5					27		14		
AK-16	M16x1.5					29		17		
AK-18	M18x1.5					32		19		
AK-22	M22x1.5					33		22		
AK-24	M24x1.5					33		24		
AK-30	M30x1.5					40		27		
AK-33	M33x1.5					49		33		

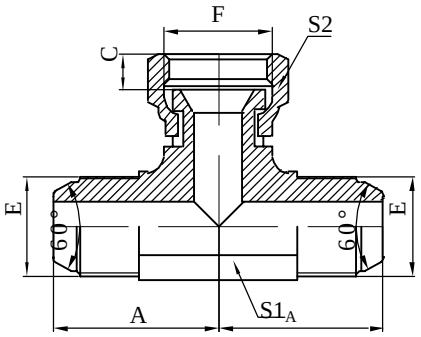

BK

日本公制外螺纹60°外锥/
日本公制内螺纹60内锥分支三通
JIS METRIC MALE60° CONE/
JIS METRIC FEMALE 60°SEAT BRANCH TEE

代号 PART NO.	螺纹 THREADE					尺 寸 DIMENSIONS				
	E	F				A	C	S1	S2	
BK-14	M14x1.5	M14x1.5				27	12	14	19	
BK-16	M16x1.5	M16x1.5				29	9.5	17	22	
BK-18	M18x1.5	M18x1.5				32	11	19	24	
BK-22	M22x1.5	M22x1.5				33	14	22	27	
BK-24	M24x1.5	M24x1.5				33	13.5	24	32	
BK-30	M30x1.5	M30x1.5				40	20	27	36	
BK-33	M33x1.5	M33x1.5				49	20.5	33	41	

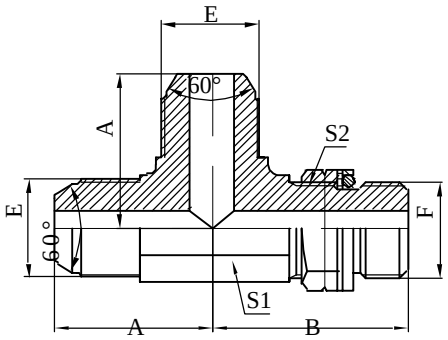

AKKG-OG

日本公制外螺纹/英管外螺
纹O型圈可调向柱端主支三通
JIS METRIC MALE/BSP MALE O-RING
RUN TEE ADJUSTABLE STUD

代号 PART NO.	螺纹 THREADE					尺 寸 DIMENSIONS				
	E	F				A	B	S1	S2	
AKKG-14-14-04OG	M14x1.5	G1/4"X19				27	31.3	14	19	
AKKG-14-14-06OG	M14x1.5	G3/8"X19				29	35.8	17	22	
AKKG-16-16-06OG	M16x1.5	G3/8"X19				29	35.8	17	22	
AKKG-18-18-06OG	M18x1.5	G3/8"X19				32	37	19	22	
AKKG-22-22-08OG	M22x1.5	G1/2"X14				33	43.2	22	27	
AKKG-24-24-08OG	M24x1.5	G1/2"X14				33	46	24	27	
AKKG-24-24-12OG	M24x1.5	G3/4"X14				40	49.3	27	32	
AKKG-30-30-12OG	M30x1.5	G3/4"X14				40	53	27	32	
AKKG-33-33-16OG	M33x1.5	G1"X11				49	53	33	41	

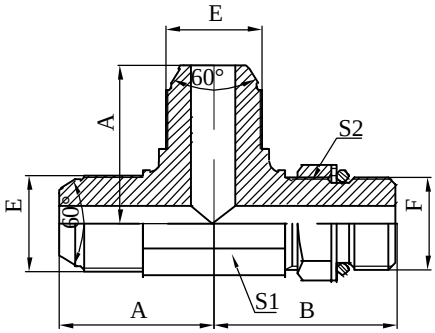

AKKH-OG

日本公制外螺纹60 °外锥/公制外
螺纹可调向柱端主支三通
JIS METRIC MALE 60 °CONE/
ADJUSTABLE STUD RUN TEE

代号 PART NO.	螺纹 THREADE				O型圈 O-RING	尺 寸 DIMENSIONS				
	E	F				A	B	S1	S2	
AKKH-14-14-12OG	M14x1.5	M12x1.5			9.3x2.4	27	33.5	14	17	
AKKH-14OG	M14x1.5	M14x1.5			11.3x2.4	27	34.5	14	19	
AKKH-16-16-14OG	M16x1.5	M14x1.5			11.3x2.4	29	35.5	17	19	
AKKH-18-18-16OG	M18x1.5	M16x1.5			13.3x2.4	32	39.5	19	22	
AKKH-18-18-20OG	M18x1.5	M20x1.5			17.3x2.4	33	44	22	27	
AKKH-20-20-18OG	M20x1.5	M18x1.5			15.3x2.4	33	42.5	22	24	
AKKH-22-22-20OG	M22x1.5	M20x1.5			17.3x2.4	33	45.5	22	27	
AKKH-24-24-20OG	M24x1.5	M20x1.5			17.3x2.4	33	47	24	27	
AKKH-24-24-22OG	M24x1.5	M22x1.5			19.3x2.4	33	47	24	27	
AKKH-30-30-27OG	M30x1.5	M27x1.5			23.5x3	40	57	27	32	
AKKH-33OG	M33x1.5	M33x1.5			29.5x3	49	59	33	41	
AKKH-36-36-33OG	M36x1.5	M33x1.5			29.5x3	46	60.5	33	41	

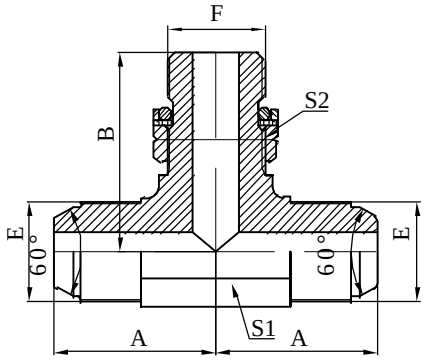

AKGK-OG

日本公制外螺纹/英管外螺
纹O型圈可调向柱端分支三通
JIS METRIC MALE/BSP MALE O-RING
ADJUSTABLE STUD BRANCH TEE

代号 PART NO.	螺纹 THREADE					尺 寸 DIMENSIONS				
	E	F				A	B	S1	S2	
AKGK-14-04-14OG	M14x1.5	G1/4"X19				27	31.3	14	19	
AKGK-14-06-14OG	M14x1.5	G3/8"X19				29	35.8	17	22	
AKGK-16-06-16OG	M16x1.5	G3/8"X19				29	35.8	17	22	
AKGK-18-06-18OG	M18x1.5	G3/8"X19				32	37	19	22	
AKGK-22-08-22OG	M22x1.5	G1/2"X14				33	43.2	22	27	
AKGK-24-08-24OG	M24x1.5	G1/2"X14				33	46	24	27	
AKGK-24-12-24OG	M24x1.5	G3/4"X14				40	49.3	27	32	
AKGK-30-12-30OG	M30x1.5	G3/4"X14				40	53	27	32	
AKGK-33-16-33OG	M33x1.5	G1"X11				49	53	33	41	

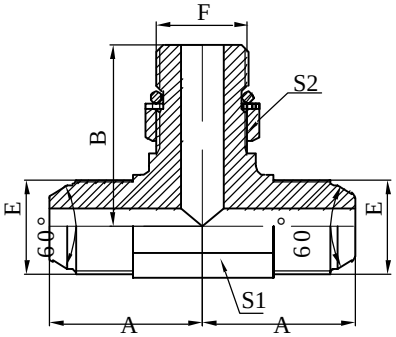

AKHK-OG

日本公制外螺纹60 °外锥/公制外
螺纹可调向柱端分支三通
JIS METRIC MALE 60 °CONE/
ADJUSTABLE STUD BRANCHTEE

代号 PART NO.	螺纹 THREADE				O型圈 O-RING	尺 寸 DIMENSIONS				
	E	F				A	B	S1	S2	
AKHK-14-12-14OG	M14x1.5	M12x1.5			9.3x2.4	27	33.5	14	17	
AKHK-14OG	M14x1.5	M14x1.5			11.3x2.4	27	34.5	14	19	
AKHK-16-14-16OG	M16x1.5	M14x1.5			11.3x2.4	29	35.5	17	19	
AKHK-18-14-18OG	M18x1.5	M14x1.5			11.3x2.4	32	37.5	19	19	
AKHK-18-16-18OG	M18x1.5	M16x1.5			13.3x2.4	32	39.5	19	22	
AKHK-18-20-18OG	M18x1.5	M20x1.5			17.3x2.4	33	44	22	27	
AKHK-20-18-20OG	M20x1.5	M18x1.5			15.3x2.4	33	42.5	22	24	
AKHK-22-20-22OG	M22x1.5	M20x1.5			17.3x2.4	33	45.5	22	27	
AKHK-24-20-24OG	M24x1.5	M20x1.5			17.3x2.4	33	47	24	27	
AKHK-24-22-24OG	M24x1.5	M22x1.5			19.3x2.4	33	47	24	27	
AKHK-30-27-30OG	M30x1.5	M27x1.5			23.5x3	40	57	27	32	
AKHK-33OG	M33x1.5	M33x1.5			29.5x3	49	59	33	41	

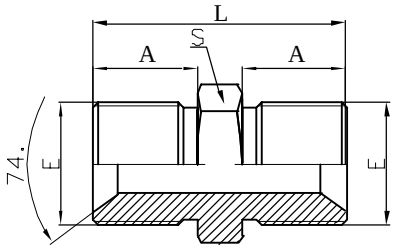

1V

公制外螺纹74°外锥面

METRIC FEMALE 74 °CONE SEAT

代号 PART NO.	螺纹E THREADE			尺 寸 DIMENSIONS			
	E			A	S	L	
1V-14	M14X1.5			8	14	22	
1V-16	M16X1.5			8.5	17	23	
1V-18	M18X1.5			8.5	19	23	
1V-22	M22X1.5			9	24	26	
1V-27	M27X1.5			8.5	30	26	
1V-30	M30X1.5			8	32	26	
1V-36	M36X2			9	41	30	
1V-39	M39X2			9	41	30	
1V-45	M45X2			9	46	31	
1V-52	M52X2			9	55	35	
1V-64	M64X2			12	65	41	

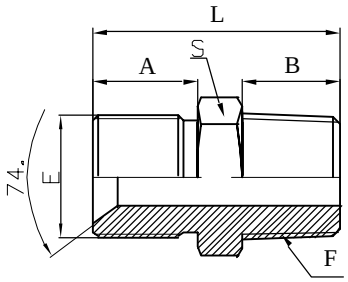

1VT

公制外螺纹74°外锥面/英锥管外螺纹

METRIC FEMALE 74°CONE SEAT/BSPT MALE

代号 PART NO.	螺纹E THREADE			尺 寸 DIMENSIONS			
	E	F		A	B	S	L
1VT-14-04	M14X1.5	ZG1/4"-19		8	14	14	28
1VT-18-06	M18X1.5	ZG3/8"-19		8.5	14	19	28.5
1VT-22-08	M22X1.5	ZG1/2"-14		9	19	24	36
1VT-30-12	M30X1.5	ZG3/4"-14		8	19.5	32	37.5
1VT-39-16	M39X2	ZG1"-11		9	24	41	45
1VT-45-20	M45X2	ZG1.1/4"-11		9	25	46	47
1VT-52-24	M52X2	ZG1.1/2"-11		9	25	55	51
1VT-64-32	M64X2	ZG2"-11		12	29	65	58

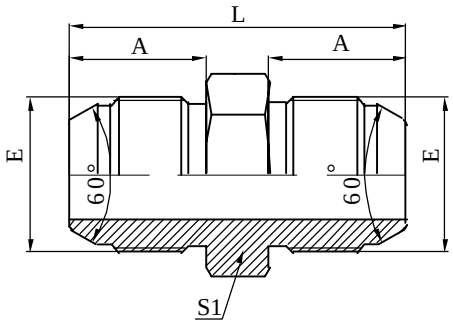

1S

日本英管外螺纹60°外锥
JIS GAS MALE 60°CONE

代号 PART NO.	螺纹 THREADE					尺 寸 DIMENSIONS				
	E					A		S1		L
1S-04	G1/4"X19					15		14		36
1S-06	G3/8"X19					16		17		38
1S-08	G1/2"X14					19		22		45
1S-12	G3/4"X14					23		30		55
1S-16	G1"X11					25		36		61
1S-20	G1.1/4"X11					29		46		71
1S-24	G1.1/2"X11					30		50		77
1S-32	G2"X11					35		70		88

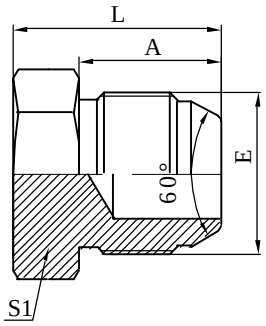

4S

日本英管外螺纹60°外锥堵头
JIS GAS MALE 60°CONE PLUG

代号 PART NO.	螺纹 THREADE					尺 寸 DIMENSIONS				
	E					A		S1		L
4S-04	G1/4"X19					15		14		21
4S-06	G3/8"X19					16		17		22
4S-08	G1/2"X14					19		22		26
4S-12	G3/4"X14					23		30		32
4S-16	G1"X11					25		36		36
4S-20	G1.1/4"X11					29		46		42
4S-24	G1.1/2"X11					30		50		47
4S-32	G2"X11					35		70		53

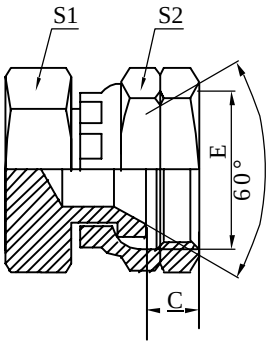

9S

日本英管内螺纹60°内锥堵头
JIS GAS FEMALE 60°SEAT PLUG

代号 PART NO.	螺纹 THREADE					尺 寸 DIMENSIONS				
	E						C	S1	S2	
9S-04	G1/4"X19						8	17	19	
9S-06	G3/8"X19						8.5	19	22	
9S-08	G1/2"X14						10.5	22	27	
9S-12	G3/4"X14						14	32	32	
9S-16	G1"X11						14.5	36	41	
9S-20	G1.1/4"X11						16	50	50	
9S-24	G1.1/2"X11						18	55	55	
9S-32	G2"X11						24	70	70	

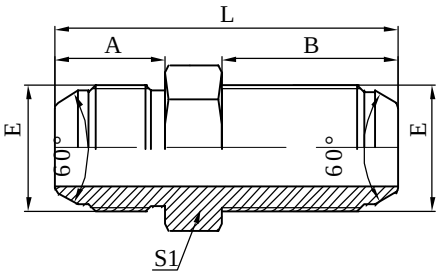

6S

日本英管外螺纹60°外锥过板接头
JIS GAS MALE 60°CONE BULKHEAD

代号 PART NO.	螺纹 THREADE					尺 寸 DIMENSIONS				
	E					A	B	S1		L
6S-04	G1/4"X19					15	32	19		53
6S-06	G3/8"X19					16	36	22		59
6S-08	G1/2"X14					19	40	27		68
6S-12	G3/4"X14					23	41	32		74
6S-16	G1"X11					25	45	41		82

备注:如需带锁母订货,则请在代号后加"LN",如6S-04LN;
Remark:In case if you are interested to order the adapter with lock nut,please insert suffix"LN"after our part NO.,for example 6S-04LN.

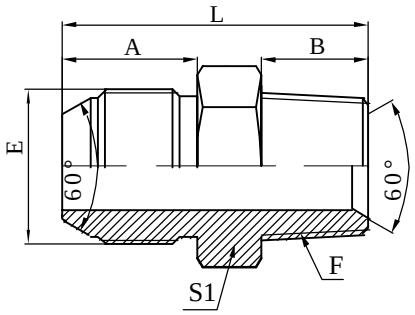

1ST

日本英管外螺纹60°外锥/英锥管外螺纹
JIS GAS MALE 60°CONE/BSPT MALE

代号 PART NO.	螺纹 THREADE					尺 寸 DIMENSIONS				
	E	F				A	B	S1		L
1ST-04	G1/4"X19	R1/4"X19				15	14	17		35
1ST-04-02	G1/4"X19	R1/8"X28				15	10	17		31
1ST-04-06	G1/4"X19	R3/8"X19				15	14	19		35
1ST-04-08	G1/4"X19	R1/2"X14				15	19	22		41
1ST-06	G3/8"X19	R3/8"X19				16	14	19		36
1ST-06-04	G3/8"X19	R1/4"X19				16	14	19		36
1ST-06-08	G3/8"X19	R1/2"X14				16	19	22		42
1ST-08	G1/2"X14	R1/2"X14				19	19	22		45
1ST-08-04	G1/2"X14	R1/4"X19				19	14	22		40
1ST-08-06	G1/2"X14	R3/8"X19				19	14	22		40
1ST-08-12	G1/2"X14	R3/4"X14				19	19.5	27		47.5
1ST-12	G3/4"X14	R3/4"X14				23	19.5	30		51.5
1ST-12-08	G3/4"X14	R1/2"X14				23	19	30		51
1ST-12-16	G3/4"X14	R1"X11				23	24	36		58
1ST-16	G1"X11	R1"X11				25	24	36		60
1ST-16-12	G1"X11	R3/4"X14				25	19.5	36		55.5
1ST-20	G1.1/4"X11	R1.1/4"X11				29	25	46		67
1ST-24	G1.1/2"X11	R1.1/2"X11				30	25	50		68
1ST-32	G2"X11	R2"X11				35	29	70		81

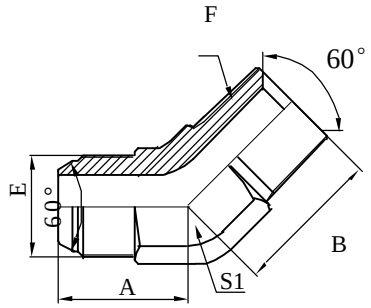

1ST4

45°日本英管外螺纹60°
外锥/英锥管外螺纹
45°JIS GAS MALE 60°
CONE/BSPT MALE

代号 PART NO.	螺纹 THREADE					尺 寸 DIMENSIONS				
	E	F				A	B	S1		
1ST4-04	G1/4"X19	R1/4"X19				22	22	14		
1ST4-04-02	G1/4"X19	R1/8"X28				22	22	14		
1ST4-04-06	G1/4"X19	R3/8"X19				22	22	17		
1ST4-04-08	G1/4"X19	R1/2"X14				27	27	22		
1ST4-06	G3/8"X19	R3/8"X19				22	22	17		
1ST4-06-04	G3/8"X19	R1/4"X19				22	22	17		
1ST4-06-08	G3/8"X19	R1/2"X14				27	27	22		
1ST4-08	G1/2"X14	R1/2"X14				27	27	22		
1ST4-08-06	G1/2"X14	R3/8"X19				27	27	22		
1ST4-12	G3/4"X14	R3/4"X14				33	33	27		
1ST4-12-08	G3/4"X14	R1/2"X14				33	33	27		
1ST4-16	G1"X11	R1"X11				37	37	33		
1ST4-16-12	G1"X11	R3/4"X14				37	37	33		
1ST4-20	G1.1/4"X11	R1.1/4"X11				40	40	44		
1ST4-24	G1.1/2"X11	R1.1/2"X11				47	47	53		
1ST4-32	G2"X11	R2"X11				55	55	65		

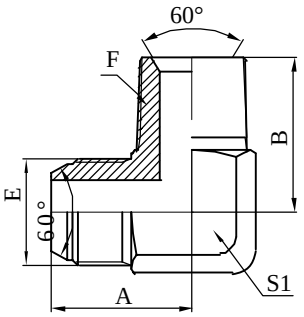

1ST9

90°日本英管外螺纹60°
外锥/英锥管外螺纹
90°JIS GAS MALE 60°
CONE/BSPT MALE

代号 PART NO.	螺纹 THREADE					尺 寸 DIMENSIONS				
	E	F				A	B	S1		
1ST9-04	G1/4"X19	R1/4"X19				29	27	14		
1ST9-04-02	G1/4"X19	R1/8"X28				29	27	14		
1ST9-04-06	G1/4"X19	R3/8"X19				29	30	17		
1ST9-06	G3/8"X19	R3/8"X19				30	28	17		
1ST9-06-04	G3/8"X19	R1/4"X19				30	28	17		
1ST9-06-08	G3/8"X19	R1/2"X14				37	37	22		
1ST9-08	G1/2"X14	R1/2"X14				37	37	22		
1ST9-08-06	G1/2"X14	R3/8"X19				37	37	22		
1ST9-08-12	G1/2"X14	R3/4"X14				41	41	27		
1ST9-12	G3/4"X14	R3/4"X14				41	41	27		
1ST9-12-08	G3/4"X14	R1/2"X14				41	41	27		
1ST9-12-16	G3/4"X14	R1"X11				49	49	33		
1ST9-16	G1"X11	R1"X11				49	49	33		
1ST9-20	G1.1/4"X11	R1.1/4"X11				57	57	44		
1ST9-24	G1.1/2"X11	R1.1/2"X11				57	57	48		
1ST9-32	G2"X11	R2"X11				66	63	65		

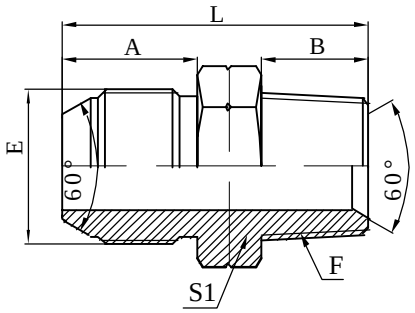

1SN

日本英管外螺纹60°外锥/布锥管外螺纹
JIS GAS MALE 60°CONE/NPT MALE

代号 PART NO.	螺纹THREADE					尺 寸 DIMENSIONS				
	E	F				A	B	S1		L
1SN-04	G1/4"X19	Z1/4"X18				15	14	17		35
1SN-04-02	G1/4"X19	Z1/8"X27				15	10	17		31
1SN-04-06	G1/4"X19	Z3/8"X18				15	14	19		35
1SN-04-08	G1/4"X19	Z1/2"X14				15	19	22		41
1SN-06	G3/8"X19	Z3/8"X18				16	14	19		36
1SN-06-04	G3/8"X19	Z1/4"X18				16	14	19		36
1SN-06-08	G3/8"X19	Z1/2"X14				16	19	22		42
1ST-08	G1/2"X14	Z1/2"X14				19	19	22		45
1SN-08-04	G1/2"X14	Z1/4"X18				19	14	22		40
1SN-08-06	G1/2"X14	Z3/8"X18				19	14	22		40
1SN-08-12	G1/2"X14	Z3/4"X14				19	19.5	27		47.5
1SN-12	G3/4"X14	Z3/4"X14				23	19.5	30		51.5
1SN-12-08	G3/4"X14	Z1/2"X14				23	19	30		51
1SN-12-16	G3/4"X14	Z1"X11.5				23	24	36		58
1SN-16	G1"X11	Z1"X11.5				25	24	36		60
1SN-16-12	G1"X11	Z3/4"X14				25	19.5	36		55.5
1SN-20	G1.1/4"X11	Z1.1/4"X11.5				29	25	46		67
1SN-24	G1.1/2"X11	Z1.1/2"X11.5				30	25	50		68
1SN-32	G2"X11	Z2"X11.5				35	29	70		81

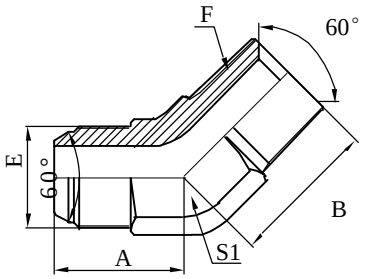

1SN4

45°日本英管外螺纹60°
外锥/布锥管外螺纹
45°JIS GAS MALE 60°
CONE/NPT MALE

代号 PART NO.	螺纹 THREADE					尺 寸 DIMENSIONS				
	E	F				A	B	S1		
1SN4-04	G1/4"X19	Z1/4"X19				22	22	14		
1SN4-04-02	G1/4"X19	Z1/8"X27				22	22	14		
1SN4-04-06	G1/4"X19	Z3/8"X18				22	22	17		
1SN4-04-08	G1/4"X19	Z1/2"X14				27	27	22		
1SN4-06	G3/8"X19	Z3/8"X18				22	22	17		
1SN4-06-04	G3/8"X19	Z1/4"X19				22	22	17		
1SN4-06-08	G3/8"X19	Z1/2"X14				27	27	22		
1SN4-08	G1/2"X14	Z1/2"X14				27	27	22		
1SN4-08-06	G1/2"X14	Z3/8"X18				27	27	22		
1SN4-12	G3/4"X14	Z3/4"X14				33	33	27		
1SN4-12-08	G3/4"X14	Z1/2"X14				33	33	27		
1SN4-16	G1"X11	Z1"X11.5				37	37	33		
1SN4-16-12	G1"X11	Z3/4"X14				37	37	33		
1SN4-20	G1.1/4"X11	Z1.1/4"X11.5				40	40	44		
1SN4-24	G1.1/2"X11	Z1.1/2"X11.5				47	47	53		
1SN4-32	G2"X11	Z2"X11.5				55	55	65		

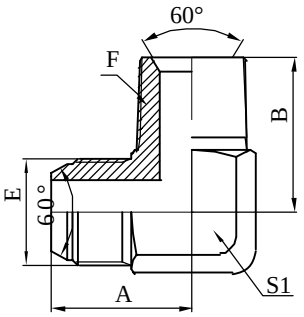

1SN9

90°日本英管外螺纹60°
外锥/布锥管外螺纹
90°JIS GAS MALE 60°
CONE/NPT MALE

代号 PART NO.	螺纹 THREADE					尺 寸 DIMENSIONS				
	E	F				A	B	S1		
1SN9-04	G1/4"X19	Z1/4"X18				29	27	14		
1SN9-04-02	G1/4"X19	Z1/8"X27				29	27	14		
1SN9-04-06	G1/4"X19	Z3/8"X18				29	30	17		
1SN9-06	G3/8"X19	Z3/8"X18				30	28	17		
1SN9-06-04	G3/8"X19	Z1/4"X18				30	28	17		
1SN9-06-08	G3/8"X19	Z1/2"X14				37	37	22		
1SN9-08	G1/2"X14	Z1/2"X14				37	37	22		
1SN9-08-06	G1/2"X14	Z3/8"X18				37	37	22		
1SN9-08-12	G1/2"X14	Z3/4"X14				41	41	27		
1SN9-12	G3/4"X14	Z3/4"X14				41	41	27		
1SN9-12-08	G3/4"X14	Z1/2"X14				41	41	27		
1SN9-12-16	G3/4"X14	Z1"X11.5				49	49	33		
1SN9-16	G1"X11	Z1"X11.5				49	49	33		
1SN9-20	G1.1/4"X11	Z1.1/4"X11.5				57	57	44		
1SN9-24	G1.1/2"X11	Z1.1/2"X11.5				57	57	48		
1SN9-32	G2"X11	Z2"X11.5				66	63	65		

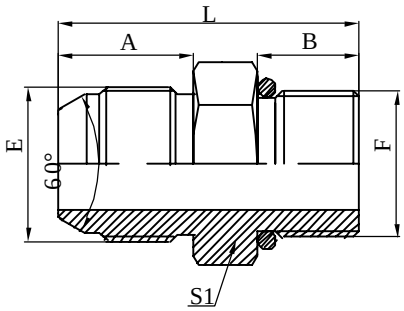

1SG

日本英管外螺纹60°外锥/
英管外螺纹O型圈
JIS GAS MALE 60°CONE/
BSP MALE O-RING

代号 PART NO.	螺纹 THREADE					尺 寸 DIMENSIONS				
	E	F				A	B	S1		L
1SG-04	G1/4"X19	G1/4"X19				15	12	19		33
1SG-06	G3/8"X19	G3/8"X19				16	13.5	22		37
1SG-08	G1/2"X14	G1/2"X14				19	16	27		44
1SG-12	G3/4"X14	G3/4"X14				23	18.5	32		51.5
1SG-16	G1"X11	G1"X11				25	20.5	41		57.5
1SG-20	G1.1/4"X11	G1.1/4"X11				29	20.5	50		66.5
1SG-24	G1.1/2"X11	G1.1/2"X11				30	23	55		70
1SG-32	G2"X11	G2"X11				35	25.5	70		78.5

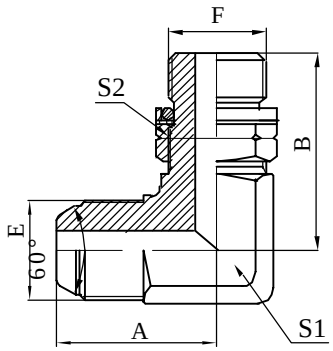

1SG9-OG

90°日本英管外螺纹60°外锥/
英管外螺纹60°O型圈可调向柱端
90°JIS GAS MALE 60°CONE/
BSP MALE O-RING ADJUSTABLE STUD

代号 PART NO.	螺纹THREADE					尺 寸 DIMENSIONS				
	E	F				A	B	S1	S2	
1SG9-04OG	G1/4"X19	G1/4"X19				29	31.3	14	19	
1SG9-06OG	G3/8"X19	G3/8"X19				30	35.8	17	22	
1SG9-08OG	G1/2"X14	G1/2"X14				37	43.2	22	27	
1SG9-12OG	G3/4"X14	G3/4"X14				41	49.3	27	32	
1SG9-16OG	G1"X11	G1"X11				49	53	33	41	
1SG9-20OG	G1.1/4"X11	G1.1/4"X11				57	59	44	50	
1SG9-24OG	G1.1/2"X11	G1.1/2"X11				57	65	48	55	

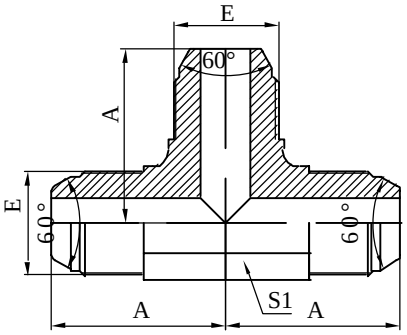

AS

日本英管外螺纹60°外锥三通
JIS GAS FEMALE 60°SEAT TEE

代号 PART NO.	螺纹 THREADE					尺 寸 DIMENSIONS				
	E	F				A		S1		
AS-04	G1/4"X19	G1/4"X19				27		14		
AS-06	G3/8"X19	G3/8"X19				29		17		
AS-08	G1/2"X14	G1/2"X14				33		22		
AS-12	G3/4"X14	G3/4"X14				40		27		
AS-16	G1"X11	G1"X11				49		33		

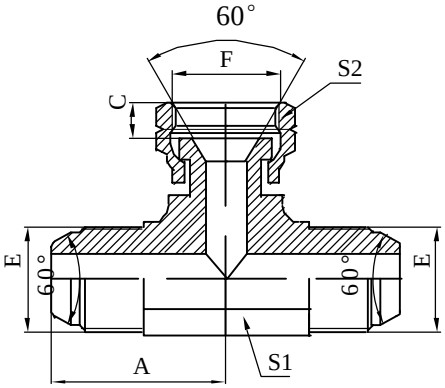

BS

日本英管外螺纹60°外锥/
日本英管内螺纹60° 内锥分支三通
JIS GAS MALE 60°CONE/
JIS GAS FEMALE 60°SEAT BRANCH TEE

代号 PART NO.	螺纹 THREADE					尺 寸 DIMENSIONS				
	E	F				A	C	S1	S2	
BS-04	G1/4"X19	G1/4"X19				27	8	14	19	
BS-06	G3/8"X19	G3/8"X19				29	8.5	17	22	
BS-08	G1/2"X14	G1/2"X14				33	10.5	22	27	
BS-12	G3/4"X14	G3/4"X14				40	14	27	32	
BS-16	G1"X11	G1"X11				49	14.5	33	41	

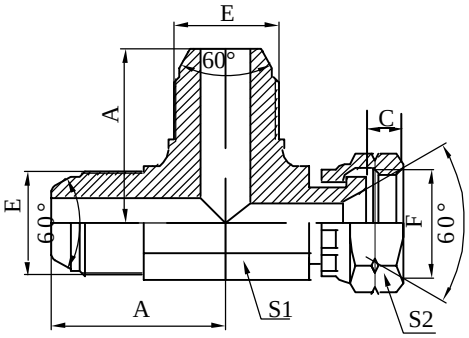

CS

日本英管外螺纹60°外锥/
日本英管内螺纹60°内锥主支三通
JIS GAS MALE 60°CONE/
JIS GAS FEMALE 60°SEAT RUN TEE

代号 PART NO.	螺纹 THREADE					尺 寸 DIMENSIONS				
	E	F				A	C	S1	S2	
CS-04	G1/4"X19	G1/4"X19				27	8	14	19	
CS-06	G3/8"X19	G3/8"X19				29	8.5	17	22	
CS-08	G1/2"X14	G1/2"X14				33	10.5	22	27	
CS-12	G3/4"X14	G3/4"X14				40	14	27	32	
CS-16	G1"X11	G1"X11				49	14.5	33	41	

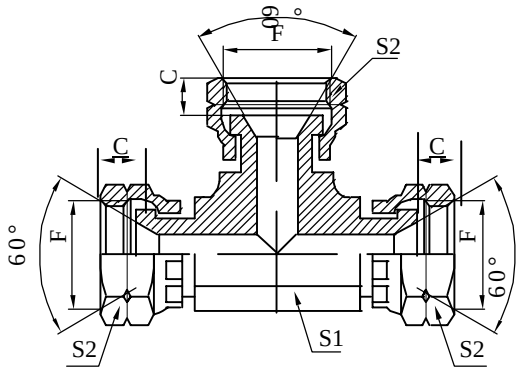

DS

日本英管内螺纹60°内锥三通
JIS GAS FEMALE 60°SEAT TEE

代号 PART NO.	螺纹 THREADE					尺 寸 DIMENSIONS				
	E	F					C	S1	S2	
DS-04	G1/4"X19	G1/4"X19					8	14	19	
DS-06	G3/8"X19	G3/8"X19					8.5	17	22	
DS-08	G1/2"X14	G1/2"X14					10.5	22	27	
DS-12	G3/4"X14	G3/4"X14					14	27	32	
DS-16	G1"X11	G1"X11					14.5	33	41	

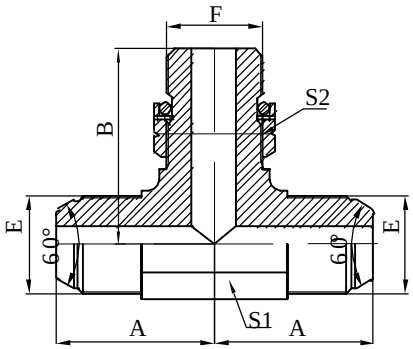

ASGS-OG

日本英管外螺纹60°外锥/英管外
螺纹O型圈可调向柱端分支三通
JIS GAS MALE 60 °CONE/BSP MALE
O-RING ADJUSTABLE STUD BRANCH TEE

代号 PART NO.	螺纹 THREADE					尺 寸 DIMENSIONS				
	E	F				A	B	S1	S2	
ASGS-04OG	G1/4"X19	G1/4"X19				27	31.3	14	19	
ASGS-06OG	G3/8"X19	G3/8"X19				29	35.8	17	22	
ASGS-08OG	G1/2"X14	G1/2"X14				33	43.2	22	27	
ASGS-12OG	G3/4"X14	G3/4"X14				40	49.3	27	32	
ASGS-16OG	G1"X11	G1"X11				49	54.5	33	41	
ASGS-20OG	G1.1/4"X11	G1.1/4"X11				57	59	44	50	

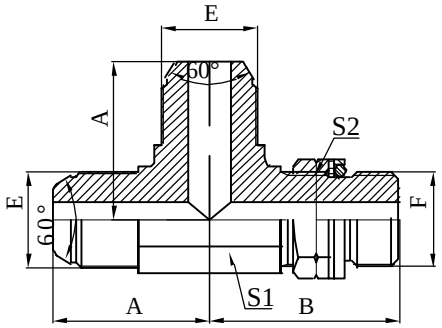

ASSG-OG

日本英管外螺纹60°外锥/英管外
螺纹O型圈可调向柱端主支三通
JIS GAS MALE 60 °CONE/BSP MALE
O-RING ADJUSTABLE STUD END RUN TEE

代号 PART NO.	螺纹 THREADE					尺 寸 DIMENSIONS				
	E	F				A	B	S1	S2	
ASSG-04OG	G1/4"X19	G1/4"X19				27	31	14	19	
ASSG-06OG	G3/8"X19	G3/8"X19				29	35.5	17	22	
ASSG-08OG	G1/2"X14	G1/2"X14				33	43.5	22	27	
ASSG-12OG	G3/4"X14	G3/4"X14				40	49.5	27	32	
ASSG-16OG	G1"X11	G1"X11				49	54.5	33	41	
ASSG-20OG	G1.1/4"X11	G1.1/4"X11				57	59	44	50	

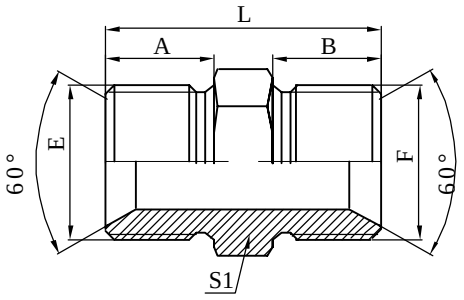

1B

英管外螺纹60°内锥
或六角端面组合垫密封
BSP MALE DOUBLE FOR
60°SEAT BONDED SEAL

代号 PART NO.	螺纹 THREADE					尺 寸 DIMENSIONS				
	E	F				A	B	S1		L
1B-02	G1/8"X28	G1/8"X28				10	10	14		26
1B-02-04	G1/8"X28	G1/4"X19				10	12	19		28
1B-02-06	G1/8"X28	G3/8"X19				10	13.5	22		31.5
1B-02-08	G1/8"X28	G1/2"X14				10	16	27		34
1B-04	G1/4"X19	G1/4"X19				12	12	19		30
1B-04-06	G1/4"X19	G3/8"X19				12	13.5	22		33
1B-04-08	G1/4"X19	G1/2"X14				12	16	27		36
1B-04-10	G1/4"X19	G5/8"X14				12	17.5	30		38.5
1B-06	G3/8"X19	G3/8"X19				13.5	13.5	22		35
1B-06-08	G3/8"X19	G1/2"X14				13.5	16	27		37.5
1B-06-10	G3/8"X19	G5/8"X14				13.5	17.5	30		40
1B-06-12	G3/8"X19	G3/4"X14				13.5	18.5	32		42
1B-08	G1/2"X14	G1/2"X14				16	16	27		40
1B-08-10	G1/2"X14	G5/8"X14				16	17.5	30		42.5
1B-08-12	G1/2"X14	G3/4"X14				16	18.5	32		44
1B-10	G5/8"X14	G5/8"X14				17.5	17.5	30		44
1B-10-12	G5/8"X14	G3/4"X14				17.5	18.5	32		46
1B-10-16	G5/8"X14	G1"X11				17.5	20.5	41		50
1B-12	G3/4"X14	G3/4"X14				18.5	18.5	32		47
1B-12-16	G3/4"X14	G1"X11				18.5	20.5	41		49
1B-12-20	G3/4"X14	G1.1/4"X11				18.5	20.5	50		56
1B-16	G1"X11	G1"X11				20.5	20.5	41		53
1B-16-20	G1"X11	G1.1/4"X11				20.5	20.5	50		57
1B-16-24	G1"X11	G1.1/2"X11				20.5	23	55		60
1B-20	G1.1/4"X11	G1.1/4"X11				20.5	20.5	50		58
1B-20-24	G1.1/4"X11	G1.1/2"X11				20.5	23	55		61
1B-24	G1.1/2"X11	G1.1/2"X11				23	23	55		63
1B-24-32	G1.1/2"X11	G2"X11				23	25.5	70		66
1B-32	G2"X11	G2"X11				25.5	25.5	70		69

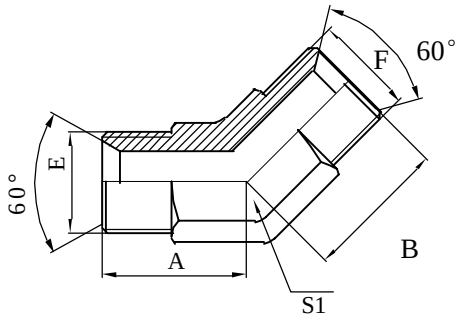

1B4

45°英管外螺纹60°内锥
45°BSP MALE 60°SEAT

代号 PART NO.	螺纹 THREADE					尺 寸 DIMENSIONS				
	E	F				A	B	S1		
1B4-02-04	G1/8"X28	G1/4"X19				22	22	14		
1B4-04	G1/4"X19	G1/4"X19				22	22	14		
1B4-04-06	G1/4"X19	G3/8"X19				22	22	17		
1B4-06	G3/8"X19	G3/8"X19				22	22	17		
1B4-06-08	G3/8"X19	G1/2"X14				27	27	22		
1B4-08	G1/2"X14	G1/2"X14				27	27	22		
1B4-08-12	G1/2"X14	G3/4"X14				33	33	27		
1B4-10	G5/8"X14	G5/8"X14				27	27	22		
1B4-10-12	G5/8"X14	G3/4"X14				33	33	27		
1B4-12	G3/4"X14	G3/4"X14				33	33	27		
1B4-12-16	G3/4"X14	G1"X11				37	37	33		
1B4-16	G1"X11	G1"X11				37	37	33		
1B4-16-20	G1"X11	G1.1/4"X11				40	40	44		
1B4-20	G1.1/4"X11	G1.1/4"X11				40	40	44		
1B4-20-24	G1.1/4"X11	G1.1/2"X11				47	47	53		
1B4-24	G1.1/2"X11	G1.1/2"X11				47	47	53		
1B4-32	G2"X11	G2"X11				55	55	65		

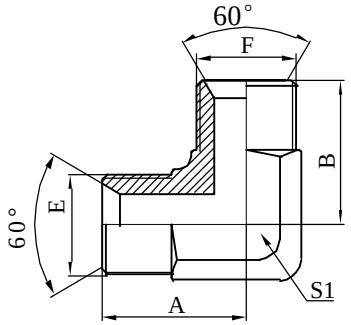

1B9

90°英管外螺纹60°内锥
90°BSP MALE 60°SEAT

代号 PART NO.	螺纹 THREADE					尺 寸 DIMENSIONS				
	E	F				A	B	S1		
1B9-02-04	G1/8"X28	G1/4"X19				27	29	14		
1B9-04	G1/4"X19	G1/4"X19				29	27	14		
1B9-04-06	G1/4"X19	G3/8"X19				28	30	17		
1B9-06	G3/8"X19	G3/8"X19				30	28	17		
1B9-06-08	G3/8"X19	G1/2"X14				37	37	22		
1B9-08	G1/2"X14	G1/2"X14				37	37	22		
1B9-08-12	G1/2"X14	G3/4"X14				41	41	27		
1B9-10	G5/8"X14	G5/8"X14				37	37	22		
1B9-10-12	G5/8"X14	G3/4"X14				41	41	27		
1B9-12	G3/4"X14	G3/4"X14				41	41	27		
1B9-12-16	G3/4"X14	G1"X11				49	49	33		
1B9-16	G1"X11	G1"X11				49	49	33		
1B9-16-20	G1"X11	G1.1/4"X11				57	57	44		
1B9-20	G1.1/4"X11	G1.1/4"X11				57	57	44		
1B9-20-24	G1.1/4"X11	G1.1/2"X11				57	57	48		
1B9-24	G1.1/2"X11	G1.1/2"X11				57	57	48		
1B9-32	G2"X11	G2"X11				66	63	65		

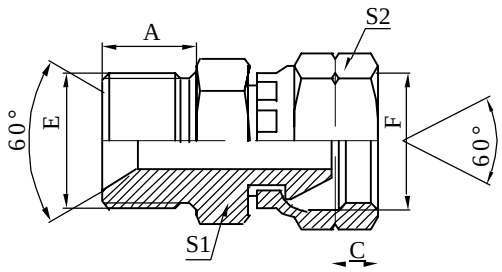

2B

英管外螺纹60°内锥或六角端面组合
垫密封/英管内螺纹60 °外锥
BSP MALE DOUBLE FOR 60 °SEAT
BONDED SEAL /BSP FEMALE 60 °CONE

代号 PART NO.	螺纹 THREADE					尺 寸 DIMENSIONS				
	E	F				A	C	S1	S2	
2B-02	G1/8"X28	G1/8"X28				10	5.5	14	14	
2B-02-04	G1/8"X28	G1/4"X19				10	5.5	14	19	
2B-04	G1/4"X19	G1/4"X19				12	5.5	19	19	
2B-04-06	G1/4"X19	G3/8"X19				12	6.5	19	22	
2B-04-08	G1/4"X19	G1/2"X14				12	8	19	27	
2B-06	G3/8"X19	G3/8"X19				13.5	6.5	22	22	
2B-06-08	G3/8"X19	G1/2"X14				13.5	8	22	27	
2B-06-10	G3/8"X19	G5/8"X14				13.5	10.5	22	30	
2B-08	G1/2"X14	G1/2"X14				16	8	27	27	
2B-08-06	G1/2"X14	G3/4"X14				16	6.5	27	27	
2B-10	G5/8"X14	G5/8"X14				17.5	10.5	30	30	
2B-10-08	G5/8"X14	G1/2"X14				17.5	8	30	27	
2B-10-12	G5/8"X14	G3/4"X14				17.5	11.5	30	32	
2B-12	G3/4"X14	G3/4"X14				18.5	11.5	32	32	
2B-12-10	G3/4"X14	G5/8"X14				18.5	10.5	32	30	
2B-12-16	G3/4"X14	G1"X11				18.5	11.5	32	41	
2B-16	G1"X11	G1"X11				20.5	11.5	41	41	
2B-16-12	G1"X11	G3/4"X14				20.5	11.5	41	32	
2B-16-20	G1"X11	G1.1/4"X11				20.5	12	41	50	
2B-20	G1.1/4"X11	G1.1/4"X11				20.5	12	50	50	
2B-20-16	G1.1/4"X11	G1"X11				20.5	11.5	50	41	
2B-20-24	G1.1/4"X11	G1.1/2"X11				20.5	13	50	55	
2B-24	G1.1/2"X11	G1.1/2"X11				23	13	55	55	
2B-32	G2"X11	G2"X11				25.5	16	70	70	

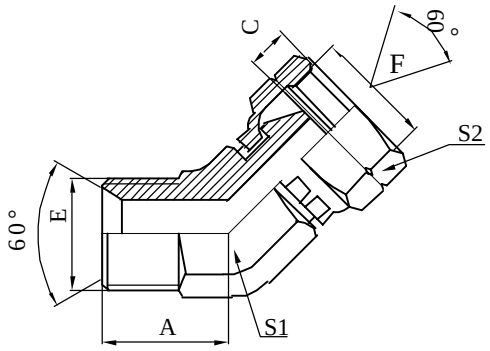

2B4

45°英管外螺纹60°内锥/
英管内螺纹60°外锥
45°BSP MALE 60°SEAT/
BSP FEMALE 60°CONE

代号 PART NO.	螺纹 THREADE					尺 寸 DIMENSIONS				
	E	F				A	C	S1	S2	
2B4-04	G1/4"X19	G1/4"X19				22	5.5	14	19	
2B4-04-06	G1/4"X19	G3/8"X19				22	6.5	17	22	
2B4-06	G3/8"X19	G3/8"X19				22	6.5	17	22	
2B4-06-04	G3/8"X19	G1/4"X19				22	5.5	17	19	
2B4-08	G1/2"X14	G1/2"X14				27	8	22	27	
2B4-08-06	G1/2"X14	G3/8"X19				27	6.5	22	22	
2B4-10	G5/8"X14	G5/8"X14				27	10.5	22	30	
2B4-10-08	G5/8"X14	G1/2"X14				27	8	22	27	
2B4-12	G3/4"X14	G3/4"X14				33	11.5	27	32	
2B4-16	G1"X11	G1"X11				37	11.5	33	41	
2B4-20	G1.1/4"X11	G1.1/4"X11				40	12	44	50	
2B4-24	G1.1/2"X11	G1.1/2"X11				47	13	53	55	
2B4-32	G2"X11	G2"X11				55	16	65	70	

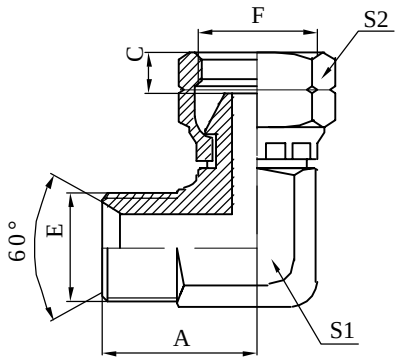

2B9

90°英管外螺纹60°内锥/
英管内螺纹60°外锥
90°BSP MALE 60°SEAT/
BSP FEMALE 60°CONE

代号 PART NO.	螺纹 THREADE					尺 寸 DIMENSIONS				
	E	F				A	C	S1	S2	
2B9-02	G1/8"X28	G1/8"X28				23	5.5	11	14	
2B9-04	G1/4"X19	G1/4"X19				29	5.5	14	19	
2B9-04-06	G1/4"X19	G3/8"X19				30	6.5	17	22	
2B9-06	G3/8"X19	G3/8"X19				30	6.5	17	22	
2B9-06-04	G3/8"X19	G1/4"X19				30	5.5	17	19	
2B9-08	G1/2"X14	G1/2"X14				37	8	22	27	
2B9-08-06	G1/2"X14	G3/8"X19				37	6.5	22	22	
2B9-10	G5/8"X14	G5/8"X14				37	10.5	22	30	
2B9-10-08	G5/8"X14	G1/2"X14				37	8	22	27	
2B9-12	G3/4"X14	G3/4"X14				41	11.5	27	32	
2B9-16	G1"X11	G1"X11				49	11.5	33	41	
2B9-20	G1.1/4"X11	G1.1/4"X11				57	12	44	50	
2B9-24	G1.1/2"X11	G1.1/2"X11				57	13	48	55	
2B9-32	G2"X11	G2"X11				66	16	65	70	

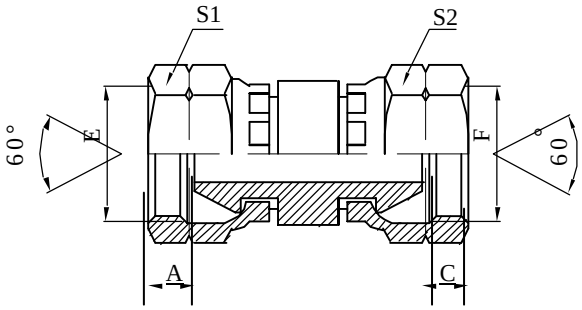

3B

英管内螺纹60°外锥
BSP FEMALE 60°CONE

代号 PART NO.	螺纹 THREADE					尺 寸 DIMENSIONS				
	E	F				A	C	S1	S2	
3B-02	G1/8"X28	G1/8"X28				5.5	5.5	14	14	
3B-02-04	G1/8"X28	G1/4"X19				5.5	5.5	14	19	
3B-04	G1/4"X19	G1/4"X19				5.5	5.5	19	19	
3B-04-06	G1/4"X19	G3/8"X19				5.5	6.5	19	22	
3B-04-08	G1/4"X19	G1/2"X14				5.5	8	19	27	
3B-06	G3/8"X19	G3/8"X19				6.5	6.5	22	22	
3B-06-08	G3/8"X19	G1/2"X14				6.5	8	22	27	
3B-08	G1/2"X14	G1/2"X14				8	8	27	27	
3B-08-10	G1/2"X14	G5/8"X14				8	10.5	27	30	
3B-08-12	G1/2"X14	G3/4"X14				8	11.5	27	32	
3B-10	G5/8"X14	G5/8"X14				10.5	10.5	30	30	
3B-10-12	G5/8"X14	G3/4"X14				10.5	11.5	30	32	
3B-12	G3/4"X14	G3/4"X14				11.5	11.5	32	32	
3B-12-16	G3/4"X14	G1"X11				11.5	11.5	32	41	
3B-16	G1"X11	G1"X11				11.5	11.5	41	41	
3B-16-20	G1"X11	G1.1/4"X11				11.5	12	41	50	
3B-20	G1.1/4"X11	G1.1/4"X11				12	12	50	50	
3B-24	G1.1/2"X11	G1.1/2"X11				13	13	55	55	
3B-32	G2"X11	G2"X11				16	16	70	70	

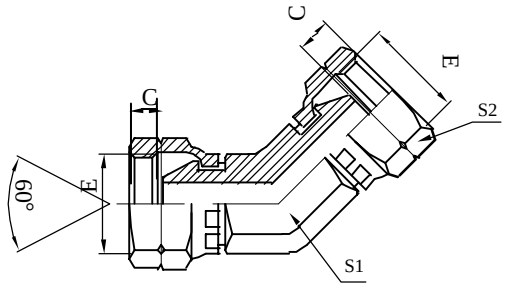

3B4

45°英管内螺纹60°外锥
45°BSP FEMALE 60°CONE

代号 PART NO.	螺纹 THREADE					尺 寸 DIMENSIONS				
	E						C	S1	S2	
3B4-02	G1/8"X28						5.5	11	14	
3B4-04	G1/4"X19						5.5	11	19	
3B4-06	G3/8"X19						6.5	17	22	
3B4-08	G1/2"X14						8	19	27	
3B4-10	G5/8"X14						10.5	22	30	
3B4-12	G3/4"X14						11.5	27	32	
3B4-16	G1"X11						11.5	33	41	
3B4-20	G1.1/4"X11						12	44	50	
3B4-24	G1.1/2"X11						13	50	55	
3B4-32	G2"X11						16	65	70	

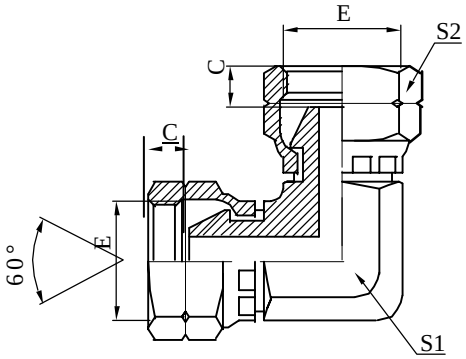

3B9

90°英管内螺纹60°外锥
90°BSP FEMALE 60°CONE

代号 PART NO.	螺纹 THREADE					尺 寸 DIMENSIONS				
	E						C	S1	S2	
3B9-02	G1/8"X28						5.5	11	14	
3B9-04	G1/4"X19						5.5	11	19	
3B9-06	G3/8"X19						6.5	17	22	
3B9-08	G1/2"X14						8	19	27	
3B9-10	G5/8"X14						10.5	22	30	
3B9-12	G3/4"X14						11.5	27	32	
3B9-16	G1"X11						11.5	33	41	
3B9-20	G1.1/4"X11						12	44	50	
3B9-24	G1.1/2"X11						13	50	55	
3B9-32	G2"X11						16	65	70	

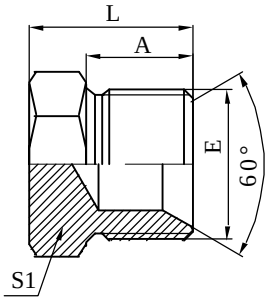

4B

英管外螺纹60°内锥或六角
端面用组合垫密封堵头
BSP MALE DOUBLE FOR 60 °
SEAT OR BONDED SEAL PLUG

代号 PART NO.	螺纹 THREADE				尺 寸 DIMENSIONS				
	E				A	S1	L		
4B-02	G1/8"X28				10	14	16		
4B-04	G1/4"X19				12	19	18		
4B-06	G3/8"X19				13.5	22	21		
4B-08	G1/2"X14				16	27	24		
4B-10	G5/8"X14				17.5	30	27		
4B-12	G3/4"X14				18.5	32	28		
4B-16	G1"X11				20.5	41	32		
4B-20	G1.1/4"X11				20.5	50	37		
4B-24	G1.1/2"X11				23	55	40		
4B-32	G2"X11				25.5	70	43		

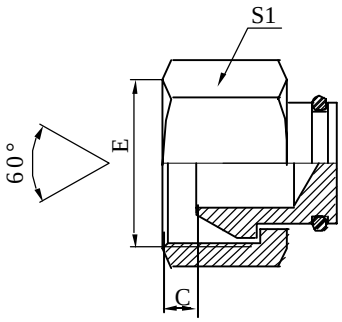

9B

英管内螺纹60°外锥堵头
BSP FEMALE 60°CONE PLUG

代号 PART NO.	螺纹 THREADE				尺 寸 DIMENSIONS				
	E				C	S1			
9B-04	G1/4"X19				5.5	17			
9B-06	G3/8"X19				6	22			
9B-08	G1/2"X14				7	27			
9B-10	G5/8"X14				8.5	27			
9B-12	G3/4"X14				9	32			
9B-16	G1"X11				11	38			
9B-20	G1.1/4"X11				11	50			
9B-24	G1.1/2"X11				12	55			
9B-32	G2"X11				15	70			

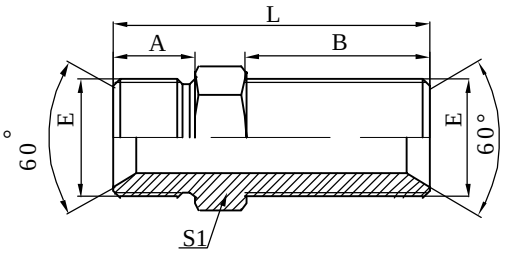

6B

英管外螺纹60°内锥过板接头
BSP MALE 60°SEAT BULKHEAD

代号 PART NO.	螺纹 THREADE				尺 寸 DIMENSIONS				
	E				A	B	S1	L	
6B-02	G1/8"X28				10	33	14	49	
6B-04	G1/4"X19				12	35	19	53	
6B-06	G3/8"X19				13.5	35	22	56	
6B-08	G1/2"X14				16	39	27	63	
6B-10	G5/8"X14				17.5	40	30	67.5	
6B-12	G3/4"X14				18.5	42	32	70	
6B-16	G1"X11				20.5	50	41	83	
6B-20	G1.1/4"X11				20.5	52	50	89.5	
6B-24	G1.1/2"X11				23	55	55	95	
6B-32	G2"X11				25.5	55	70	98.5	

备注:如需带锁母订货,则请在代号后加"LN",如6B-12LN;
Remark:In case if you are interested to order the adapter with lock nut,please insert suffix"LN"after our part NO.,for example 6B-12LN.

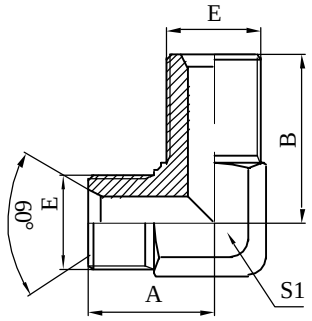

6B9

90°英管外螺纹60°内锥过板接头
90°BSP MALE 60°SEAT BULKHEAD

代号 PART NO.	螺纹 THREADE				尺 寸 DIMENSIONS				
	E				A	B	S1		
6B9-04	G1/4"X19				29	51	14		
6B9-06	G3/8"X19				30	53.5	17		
6B9-08	G1/2"X14				37	58.5	22		
6B9-12	G3/4"X14				41	64	27		
6B9-16	G1"X11				49	71	33		

备注:如需带锁母订货,则请在代号后加"LN",如6B9-12LN;
Remark:In case if you are interested to order the adapter with lock nut,please insert suffix"LN"after our part NO.,for example 6B9-12LN.

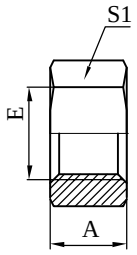

8B

英管螺纹锁母
BSP LOCK NUT

代号 PART NO.	螺纹 THREADE				尺 寸 DIMENSIONS				
	E				A		S1		
8B-02	G1/8"X28				5.5		14		
8B-04	G1/4"X19				6.5		19		
8B-06	G3/8"X19				7		22		
8B-08	G1/2"X14				9		27		
8B-10	G5/8"X14				9		30		
8B-12	G3/4"X14				10.5		32		
8B-16	G1"X11				10.5		41		
8B-20	G1.1/4"X11				10.5		50		
8B-24	G1.1/2"X11				10.5		55		
8B-32	G2"X11				10.5		70		

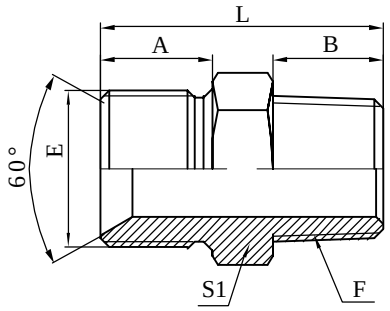

1BT

英管外螺纹60°内锥或六角端面
组合垫密封/英锥管外螺纹
BSP MALE DOUBLE FOR 60 °SEAT
BONDED SEAL/BSPT MALE

代号 PART NO.	螺纹 THREADE					尺 寸 DIMENSIONS				
	E	F				A	B	S1		L
1BT-02	G1/8"X28	R1/8"X28				10	10	14		26
1BT-02-04	G1/8"X28	R1/4"X19				10	14	14		30
1BT-04	G1/4"X19	R1/4"X19				12	14	19		32
1BT-04-02	G1/4"X19	R1/8"X28				12	10	19		28
1BT-04-06	G1/4"X19	R3/8"X19				12	14	19		32
1BT-06	G3/8"X19	R3/8"X19				13.5	14	22		35
1BT-06-04	G3/8"X19	R1/4"X19				13.5	14	22		35
1BT-06-08	G3/8"X19	R1/2"X14				13.5	19	22		41
1BT-08	G1/2"X14	R1/2"X14				16	19	27		45
1BT-08-06	G1/2"X14	R3/8"X19				16	14	27		40
1BT-08-12	G1/2"X14	R3/4"X14				16	19.5	27		45
1BT-10-08	G5/8"X14	R1/2"X14				17.5	19	30		45
1BT-10-12	G5/8"X14	R3/4"X14				17.5	19.5	30		47
1BT-12	G3/4"X14	R3/4"X14				18.5	19.5	32		48
1BT-12-08	G3/4"X14	R1/2"X14				18.5	19	32		47
1BT-12-16	G3/4"X14	R1"X11				18.5	24	36		53
1BT-16	G1"X11	R1"X11				20.5	24	41		58
1BT-16-12	G1"X11	R3/4"X14				20.5	19.5	41		53
1BT-16-20	G1"X11	R1.1/4"X11				20.5	25	46		59
1BT-20	G1.1/4"X11	R1.1/4"X11				20.5	25	50		62
1BT-20-16	G1.1/4"X11	R1"X11				20.5	24	50		61
1BT-20-24	G1.1/4"X11	R1.1/2"X11				20.5	25	50		62
1BT-24	G1.1/2"X11	R1.1/2"X11				23	25	55		65
1BT-24-16	G1.1/2"X11	R1"X11				23	24	55		61
1BT-24-20	G1.1/2"X11	R1.1/4"X11				23	25	55		65
1BT-24-32	G1.1/2"X11	R2"X11				23	29	65		69
1BT-32	G2"X11	R2"X11				25.5	29	70		72
1BT-32-24	G2"X11	R1.1/2"X11				25.5	25	70		68

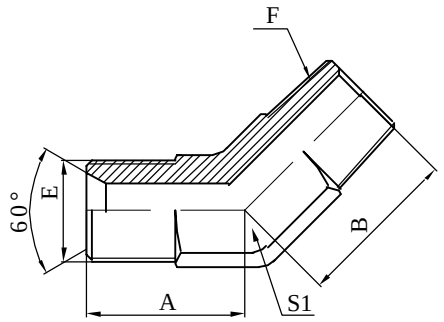

1BT4

45°英管外螺纹60°内锥/英锥管外螺纹
45°BSP MALE 60°SEAT /BSPT MALE

代号 PART NO.	螺纹 THREADE					尺 寸 DIMENSIONS				
	E	F				A	B	S1		
1BT4-02	G1/8"X28	R1/8"X28				17	17	11		
1BT4-04	G1/4"X19	R1/4"X19				22	22	14		
1BT4-04-06	G1/4"X19	R3/8"X19				22	22	17		
1BT4-06	G3/8"X19	R3/8"X19				22	22	17		
1BT4-06-04	G3/8"X19	R1/4"X19				22	22	17		
1BT4-06-08	G3/8"X19	R1/2"X14				27	27	22		
1BT4-06-12	G3/8"X19	R3/4"X14				33	33	27		
1BT4-08	G1/2"X14	R1/2"X14				27	27	22		
1BT4-08-06	G1/2"X14	R3/8"X19				27	27	22		
1BT4-08-12	G1/2"X14	R3/4"X14				33	33	27		
1BT4-10-08	G5/8"X14	R1/2"X14				27	27	22		
1BT4-10-12	G5/8"X14	R3/4"X14				33	33	27		
1BT4-12	G3/4"X14	R3/4"X14				33	33	27		
1BT4-12-08	G3/4"X14	R1/2"X14				33	33	27		
1BT4-12-16	G3/4"X14	R1"X11				37	37	33		
1BT4-16	G1"X11	R1"X11				37	37	33		
1BT4-16-12	G1"X11	R3/4"X14				37	37	33		
1BT4-16-20	G1"X11	R1.1/4"X11				40	40	44		
1BT4-20	G1.1/4"X11	R1.1/4"X11				40	40	44		
1BT4-20-16	G1.1/4"X11	R1"X11				40	40	44		
1BT4-20-24	G1.1/4"X11	R1.1/2"X11				47	47	52		
1BT4-24	G1.1/2"X11	R1.1/2"X11				47	47	52		
1BT4-24-20	G1.1/2"X11	R1.1/4"X11				47	47	52		
1BT4-24-32	G1.1/2"X11	R2"X11				55	55	65		
1BT4-32	G2"X11	R2"X11				55	55	65		
1BT4-32-24	G2"X11	R1.1/2"X11				55	55	65		

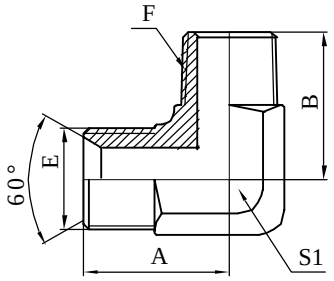

1BT9

90°英管外螺纹60°内锥/英锥管外螺纹
90°BSP MALE 60°SEAT /BSPT MALE

代号 PART NO.	螺纹 THREADE					尺 寸 DIMENSIONS				
	E	F				A	B	S1		
1BT9-02	G1/8"X28	R1/8"X28				25	25	11		
1BT9-02-04	G1/8"X28	R1/4"X19				27	29	14		
1BT9-04	G1/4"X19	R1/4"X19				29	27	14		
1BT9-04-02	G1/4"X19	R1/8"X28				29	27	14		
1BT9-04-06	G1/4"X19	R3/8"X19				29	30	17		
1BT9-06	G3/8"X19	R3/8"X19				30	29	17		
1BT9-06-04	G3/8"X19	R1/4"X19				30	29	17		
1BT9-06-08	G3/8"X19	R1/2"X14				37	37	22		
1BT9-08	G1/2"X14	R1/2"X14				37	37	22		
1BT9-08-06	G1/2"X14	R3/8"X19				37	37	22		
1BT9-08-12	G1/2"X14	R3/4"X14				41	41	27		
1BT9-10-08	G5/8"X14	R1/2"X14				41	41	27		
1BT9-10-12	G5/8"X14	R3/4"X14				41	41	27		
1BT9-12	G3/4"X14	R3/4"X14				41	41	27		
1BT9-12-08	G3/4"X14	R1/2"X14				41	41	27		
1BT9-12-16	G3/4"X14	R1"X11				49	49	33		
1BT9-16	G1"X11	R1"X11				49	49	33		
1BT9-16-12	G1"X11	R3/4"X14				49	49	33		
1BT9-16-20	G1"X11	R1.1/4"X11				57	57	44		
1BT9-20	G1.1/4"X11	R1.1/4"X11				57	57	44		
1BT9-20-16	G1.1/4"X11	R1"X11				57	57	44		
1BT9-20-24	G1.1/4"X11	R1.1/2"X11				57	57	48		
1BT9-24	G1.1/2"X11	R1.1/2"X11				57	57	48		
1BT9-24-20	G1.1/2"X11	R1.1/4"X11				57	57	48		
1BT9-24-32	G1.1/2"X11	R2"X11				66	66	65		
1BT9-32	G2"X11	R2"X11				66	66	65		
1BT9-32-24	G2"X11	R1.1/2"X11				66	66	65		

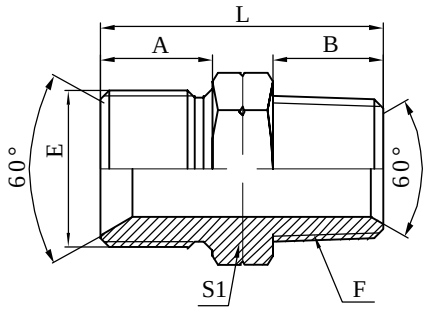

1BN

英管外螺纹60°\u20869X锥六角或端面
组合垫密封/布锥管外螺纹
BSP MALE DOUBLE FOR 60 °SEAT
BONDED SEAL/NPT MALE

代号 PART NO.	螺纹 THREADE					尺 寸 DIMENSIONS				
	E	F				A	B	S1		L
1BN-02	G1/8"X28	Z1/8"X27				10	10	14		26
1BN-02-04	G1/8"X28	Z1/4"X18				10	14	14		30
1BN-04	G1/4"X19	Z1/4"X18				12	14	19		32
1BN-04-02	G1/4"X19	Z1/8"X27				12	10	19		28
1BN-04-06	G1/4"X19	Z3/8"X18				12	14	19		32
1BN-06	G3/8"X19	Z3/8"X18				13.5	14	22		35
1BN-06-04	G3/8"X19	Z1/4"X18				13.5	14	22		35
1BN-06-08	G3/8"X19	Z1/2"X14				13.5	19	22		41
1BN-08	G1/2"X14	Z1/2"X14				16	19	27		45
1BN-08-06	G1/2"X14	Z3/8"X18				16	14	27		40
1BN-08-12	G1/2"X14	Z3/4"X14				16	19.5	27		45
1BN-10-08	G5/8"X14	Z1/2"X14				17.5	19	30		45
1BN-10-12	G5/8"X14	Z3/4"X14				17.5	19.5	30		47
1BN-12	G3/4"X14	Z3/4"X14				18.5	19.5	32		48
1BN-12-08	G3/4"X14	Z1/2"X14				18.5	19	32		47
1BN-12-16	G3/4"X14	Z1"X11.5				18.5	24	36		53
1BN-16	G1"X11	Z1"X11.5				20.5	24	41		58
1BN-16-12	G1"X11	Z3/4"X14				20.5	19.5	41		53
1BN-16-20	G1"X11	Z1.1/4"X11.5				20.5	25	46		59
1BN-20	G1.1/4"X11	Z1.1/4"X11.5				20.5	25	50		62
1BN-20-16	G1.1/4"X11	Z1"X11.5				20.5	24	50		61
1BN-20-24	G1.1/4"X11	Z1.1/2"X11.5				20.5	25	50		62
1BN-24	G1.1/2"X11	Z1.1/2"X11.5				23	25	55		65
1BN-24-20	G1.1/2"X11	Z1.1/4"X11.5				23	25	55		65
1BN-24-32	G1.1/2"X11	Z2"X11.5				23	29	65		69
1BN-32	G2"X11	Z2"X11.5				25.5	29	70		72
1BN-32-24	G2"X11	Z1.1/2"X11.5				25.5	25	70		68

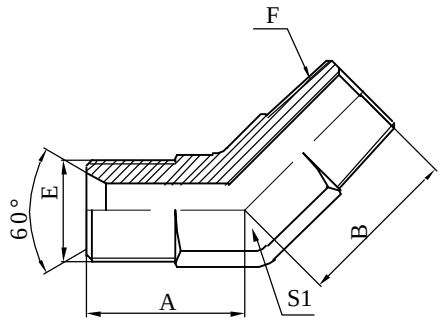

1BN4

45°英管外螺纹60°内锥/布锥管外螺纹
45°BSP MALE 60°SEAT /NPT MALE

代号 PART NO.	螺纹 THREADE					尺 寸 DIMENSIONS				
	E	F				A	B	S1		
1BN4-04	G1/4"X19	Z1/4"X18				22	22	14		
1BN4-04-02	G1/4"X19	Z1/8"X27				22	22	14		
1BN4-06	G3/8"X19	Z3/8"X18				22	22	17		
1BN4-06-04	G3/8"X19	Z1/4"X18				22	22	17		
1BN4-06-08	G3/8"X19	Z1/2"X14				27	27	22		
1BN4-06-12	G3/8"X19	Z3/4"X14				33	33	27		
1BN4-08	G1/2"X14	Z1/2"X14				27	27	22		
1BN4-08-06	G1/2"X14	Z3/8"X18				27	27	22		
1BN4-12	G3/4"X14	Z3/4"X14				33	33	27		
1BN4-12-08	G3/4"X14	Z1/2"X14				33	33	27		
1BN4-12-16	G3/4"X14	Z1"X11.5				37	37	33		
1BN4-16	G1"X11	Z1"X11.5				37	37	33		
1BN4-16-12	G1"X11	Z3/4"X14				37	37	33		
1BN4-20	G1.1/4"X11	Z1.1/4"X11.5				40	40	44		
1BN4-24	G1.1/2"X11	Z1.1/2"X11.5				47	47	52		
1BN4-32	G2"X11	Z2"X11.5				55	55	65		

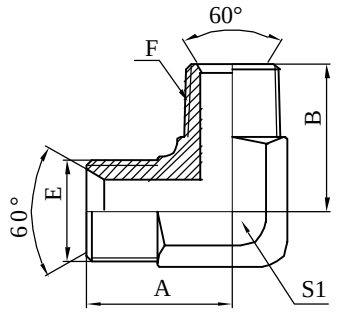

1BN9

90°英管外螺纹60°内锥/布锥管外螺纹
90°BSP MALE 60°SEAT /NPT MALE

代号 PART NO.	螺纹 THREADE					尺 寸 DIMENSIONS				
	E	F				A	B	S1		
1BN9-04	G1/4"X19	Z1/4"X18				29	27	14		
1BN9-04-02	G1/4"X19	Z1/8"X27				29	27	14		
1BN9-06	G3/8"X19	Z3/8"X18				30	29	17		
1BN9-06-04	G3/8"X19	Z1/4"X18				30	29	17		
1BN9-06-08	G3/8"X19	Z1/2"X14				37	37	22		
1BN9-06-12	G3/8"X19	Z3/4"X14				41	41	27		
1BN9-08	G1/2"X14	Z1/2"X14				37	37	22		
1BN9-08-06	G1/2"X14	Z3/8"X18				37	37	22		
1BN9-12	G3/4"X14	Z3/4"X14				41	41	27		
1BN9-12-08	G3/4"X14	Z1/2"X14				41	41	27		
1BN9-12-16	G3/4"X14	Z1"X11.5				49	49	33		
1BN9-16	G1"X11	Z1"X11.5				49	49	33		
1BN9-16-12	G1"X11	Z3/4"X14				49	49	33		
1BN9-20	G1.1/4"X11	Z1.1/4"X11.5				57	57	44		
1BN9-24	G1.1/2"X11	Z1.1/2"X11.5				57	57	48		
1BN9-32	G2"X11	Z2"X11.5				66	66	65		

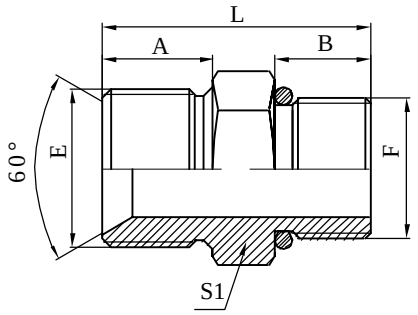

1BG

英管外螺纹60°内锥或六角端面
组合垫密封/英锥管外螺纹O 型圈
BSP MALE DOUBLE FOR 60 °SEAT
BONDED SEAL/BSPT MALE O-RING

代号 PART NO.	螺纹 THREADE					尺 寸 DIMENSIONS				
	E	F				A	B	S1		L
1BG-02	G1/8"X28	G1/8"X28				10	9	14		25
1BG-04	G1/4"X19	G1/4"X19				12	12	19		30
1BG-04-06	G1/4"X19	G3/8"X19				12	13.5	19		31.5
1BG-06	G3/8"X19	G3/8"X19				13.5	13.5	22		35
1BG-06-04	G3/8"X19	G1/4"X19				13.5	12	22		33.5
1BG-06-08	G3/8"X19	G1/2"X14				13.5	16	27		39.5
1BG-08	G1/2"X14	G1/2"X14				16	16	27		42
1BG-08-06	G1/2"X14	G3/8"X19				16	13.5	27		39.5
1BG-08-12	G1/2"X14	G3/4"X14				16	18.5	27		44.5
1BG-10-08	G5/8"X14	G1/2"X14				17.5	16	30		43.5
1BG-12	G3/4"X14	G3/4"X14				18.5	18.5	32		47
1BG-12-08	G3/4"X14	G1/2"X14				18.5	16	32		44.5
1BG-16-08	G1"X11	G1/2"X14				20.5	16	41		48.5
1BG-16	G1"X11	G1"X11				20.5	20.5	41		53
1BG-16-12	G1"X11	G3/4"X14				20.5	18.5	41		51
1BG-20	G1.1/4"X11	G1.1/4"X11				20.5	20.5	50		58
1BG-24	G1.1/2"X11	G1.1/2"X11				23	23	55		63

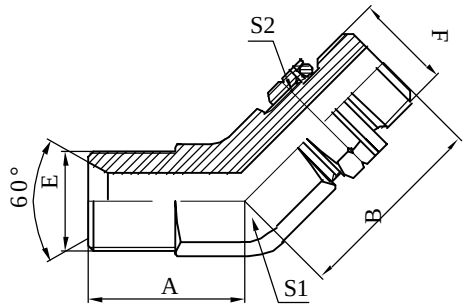

1BG4-OG

45°英管外螺纹60°内锥/
英管外螺纹O型圈可调向柱端
45°BSP MALE 60°SEAT/BSP
MALE O-RING ADJUSTABLE STUD END

代号 PART NO.	螺纹 THREADE					尺 寸 DIMENSIONS				
	E	F				A	B	S1	S2	
1BG4-04OG	G1/4"X19	G1/4"X19				22	28	14	19	
1BG4-04-06OG	G1/4"X19	G3/8"X19				22	30	17	22	
1BG4-04-08OG	G1/4"X19	G1/2"X14				27	36	22	27	
1BG4-06OG	G3/8"X19	G3/8"X19				22	30	17	22	
1BG4-06-08OG	G3/8"X19	G1/2"X14				27	36	22	27	
1BG4-08OG	G1/2"X14	G1/2"X14				27	36	22	27	
1BG4-12OG	G3/4"X14	G3/4"X14				33	42	27	32	
1BG4-12-16OG	G3/4"X14	G1"X11				37	44	33	41	
1BG4-16OG	G1"X11	G1"X11				37	44	33	41	
1BG4-20OG	G1.1/4"X11	G1.1/4"X11				40	47.5	44	50	
1BG4-24OG	G1.1/2"X11	G1.1/2"X11				47	51.5	52	55	

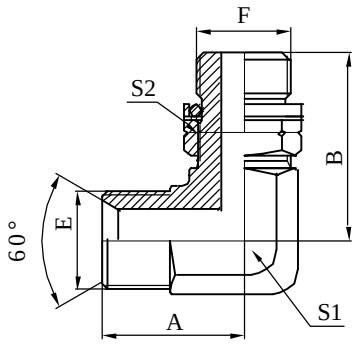

1BG9-OG

90°英管外螺纹60°内锥/
英管外螺纹O型圈可调向柱端
90°BSP MALE 60°SEAT/BSP
MALE O-RING ADJUSTABLE STUD END

代号 PART NO.	螺纹 THREADE					尺 寸 DIMENSIONS				
	E	F				A	B	S1	S2	
1BG9-04OG	G1/4"X19	G1/4"X19				29	31.5	14	19	
1BG9-04-06OG	G1/4"X19	G3/8"X19				30	36.8	17	22	
1BG9-06OG	G3/8"X19	G3/8"X19				30	36.8	17	22	
1BG9-06-08OG	G3/8"X19	G1/2"X14				37	43.2	22	27	
1BG9-08OG	G1/2"X14	G1/2"X14				37	43.2	22	27	
1BG9-08-12OG	G1/2"X14	G3/4"X14				41	49.3	27	32	
1BG9-12OG	G3/4"X14	G3/4"X14				41	49.3	27	32	
1BG9-12-16OG	G3/4"X14	G1"X11				49	53	33	41	
1BG9-16OG	G1"X11	G1"X11				49	53	33	41	
1BG9-20-16OG	G1.1/4"X11	G1"X11				57	58	44	41	
1BG9-20OG	G1.1/4"X11	G1.1/4"X11				57	58	44	50	
1BG9-24OG	G1.1/2"X11	G1.1/2"X11				57	63	48	55	

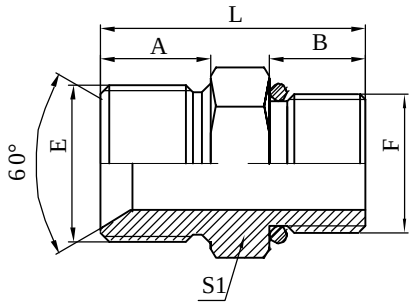

1BH

英管外螺纹60°内锥或六角端面
组合垫密封/公制外螺纹轻系列
BSP MALE DOUBLE FOR 60 °SEAT
BONDED SEAL/METRIC MALE L-SERIES

代号 PART NO.	螺纹 THREADE					尺 寸 DIMENSIONS				
	E	F				A	B	S1		L
1BH-02-10	G1/8"X28	M10x1				10	11	14		27
1BH-02-12	G1/8"X28	M12x1.5				10	11	14		27
1BH-04-12	G1/4"X19	M12x1.5				12	11	19		29
1BH-04-14	G1/4"X19	M14x1.5				12	11	19		29
1BH-04-16	G1/4"X19	M16x1.5				12	11	19		29
1BH-06-14	G3/8"X19	M14x1.5				13.5	11	22		32.5
1BH-06-16	G3/8"X19	M16x1.5				13.5	11	22		32.5
1BH-06-18	G3/8"X19	M18x1.5				13.5	11	22		32.5
1BH-08-18	G1/2"X14	M18x1.5				16	11	27		37
1BH-08-22	G1/2"X14	M22x1.5				16	12	27		38
1BH-10-22	G5/8"X14	M22x1.5				17.5	12	30		39.5
1BH-12-16	G3/4"X14	M16x1.5				18.5	11	32		39.5
1BH-12-22	G3/4"X14	M22x1.5				18.5	12	32		40.5
1BH-12-27	G3/4"X14	M27x1.5				18.5	13	32		41.5
1BH-16-27	G1"X11	M27x1.5				20.5	13	41		45.5

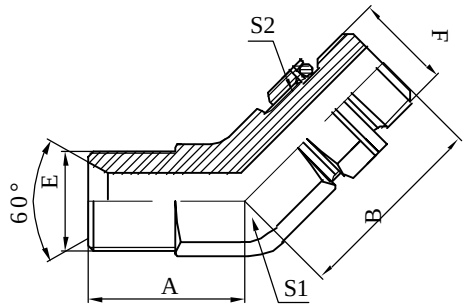

1BH4-OG

45°英管外螺纹60°内锥/
公制外螺纹轻系列
45°BSP MALE 60°SEAT/
METRIC MALE 0-RING

代号 PART NO.	螺纹 THREADE					尺 寸 DIMENSIONS				
	E	F				A	B	S1	S2	
1BH4-02-10OG	G1/8"X28	M10x1				20	23.5	11	14	
1BH4-02-12OG	G1/8"X28	M12x1.5				20	27.5	11	17	
1BH4-04-12OG	G1/4"X19	M12x1.5				22	28.3	14	17	
1BH4-04-14OG	G1/4"X19	M14x1.5				22	28.3	14	19	
1BH4-04-16OG	G1/4"X19	M16x1.5				22	29.3	17	22	
1BH4-06-14OG	G3/8"X19	M14x1.5				22	28.8	17	19	
1BH4-06-16OG	G3/8"X19	M16x1.5				22	29.3	17	22	
1BH4-06-18OG	G3/8"X19	M18x1.5				25	31	19	24	
1BH4-08-18OG	G1/2"X14	M18x1.5				27	33.3	22	24	
1BH4-08-22OG	G1/2"X14	M22x1.5				33	33.3	27	27	
1BH4-10-22OG	G5/8"X14	M22x1.5				33	33.3	27	27	
1BH4-12-22OG	G3/4"X14	M22x1.5				33	34.5	27	27	
1BH4-12-27OG	G3/4"X14	M27x1.5				33	39.5	27	32	
1BH4-16-27OG	G1"X11	M27x1.5				37	40.5	33	32	

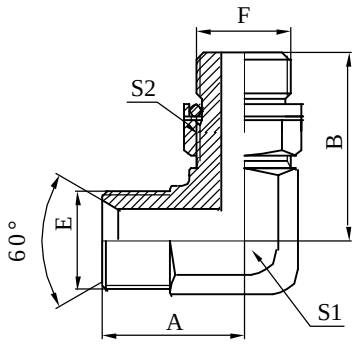

1BH9-OG

90°英管外螺纹60°内锥/
公制外螺纹轻系列
90°BSP MALE 60°SEAT/
METRIC MALE 0-RING

代号 PART NO.	螺纹 THREADE					尺 寸 DIMENSIONS				
	E	F				A	B	S1	S2	
1BH9-02-10OG	G1/8"X28	M10x1				25	26.5	11	14	
1BH9-02-12OG	G1/8"X28	M12x1.5				25	30.5	11	17	
1BH9-04-12OG	G1/4"X19	M12x1.5				29	32	14	17	
1BH9-04-14OG	G1/4"X19	M14x1.5				29	32.5	14	19	
1BH9-04-16OG	G1/4"X19	M16x1.5				30	34.8	17	22	
1BH9-06-14OG	G3/8"X19	M14x1.5				30	34	17	19	
1BH9-06-16OG	G3/8"X19	M16x1.5				30	34.8	17	22	
1BH9-06-18OG	G3/8"X19	M18x1.5				33	37	19	24	
1BH9-08-18OG	G1/2"X14	M18x1.5				37	39.5	22	24	
1BH9-08-22OG	G1/2"X14	M22x1.5				40	40.2	27	27	
1BH9-10-22OG	G5/8"X14	M22x1.5				40	40.2	27	27	
1BH9-12-22OG	G3/4"X14	M22x1.5				40	43.5	27	27	
1BH9-12-27OG	G3/4"X14	M27x1.5				40	48.5	27	32	
1BH9-16-27OG	G1"X11	M27x1.5				49	52	33	32	

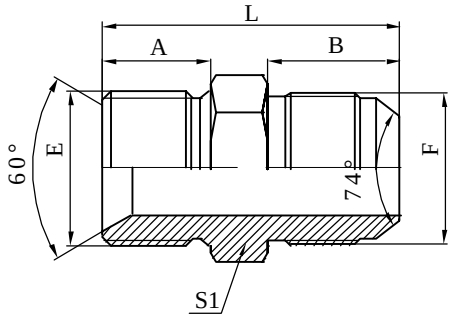

1BJ

英管外螺纹60°内锥或六角端面组
合垫密封/美制JIC 外螺纹74 °外锥
BSP MALE DOUBLE FOR 60 °SEAT
BONDED SEAL/JIC MALE 74 °CONE

代号	螺纹 THREADE					尺 寸 DIMENSIONS				
PART NO.	E	F				A	B	S1	L	
1BJ-02-04	G1/8"X28	U7/16"X20				10	14	14	30	
1BJ-02-05	G1/8"X28	U1/2"X20				10	14	14	30	
1BJ-02-06	G1/8"X28	U9/16"X18				10	14	14	30	
1BJ-04	G1/4"X19	U7/16"X20				12	14	19	32	
1BJ-04-05	G1/4"X19	U1/2"X20				12	14	19	32	
1BJ-04-06	G1/4"X19	U9/16"X18				12	14	19	32	
1BJ-04-08	G1/4"X19	U3/4"X16				12	16.7	19	37	
1BJ-04-10	G1/4"X19	U7/8"X14				12	19.5	22	39.5	
1BJ-06	G3/8"X19	U9/16"X18				13.5	14	22	35	
1BJ-06-04	G3/8"X19	U7/16"X20				13.5	14	22	35	
1BJ-06-05	G3/8"X19	U1/2"X20				13.5	14	22	35	
1BJ-06-08	G3/8"X19	U3/4"X16				13.5	16.7	22	38	
1BJ-06-10	G3/8"X19	U7/8"X14				13.5	19.5	22	41	
1BJ-06-12	G3/8"X19	U1.1/16"X12				13.5	22	30	44.5	
1BJ-08	G1/2"X14	U3/4"X16				16	16.7	27	42	
1BJ-08-04	G1/2"X14	U7/16"X20				16	14	27	40	
1BJ-08-05	G1/2"X14	U1/2"X20				16	14	27	40	
1BJ-08-06	G1/2"X14	U9/16"X18				16	14	27	40	
1BJ-08-10	G1/2"X14	U7/8"X14				16	19.5	27	45.5	
1BJ-08-12	G1/2"X14	U1.1/16"X12				16	22	30	47	
1BJ-08-16	G1/2"X14	U1.5/16"X12				16	23	36	50	
1BJ-10	G5/8"X14	U7/8"X14				17.5	19.5	30	46	
1BJ-10-08	G5/8"X14	U3/4"X16				17.5	16.7	30	43	
1BJ-10-12	G5/8"X14	U1.1/16"X12				17.5	22	30	48.5	
1BJ-10-16	G5/8"X14	U1.5/16"X12				17.5	23	36	51.5	
1BJ-12	G3/4"X14	U1.1/16"X12				18.5	22	32	50	
1BJ-12-06	G3/4"X14	U9/16"X18				18.5	14	32	42	
1BJ-12-08	G3/4"X14	U3/4"X16				18.5	16.7	32	46	
1BJ-12-10	G3/4"X14	U7/8"X14				18.5	19.5	32	49	

接上页

代号 PART NO.	螺纹 THREADE					尺 寸 DIMENSIONS				
	E	F				A	B	S1	L	
1BJ-12-16	G3/4"X14	U1.5/16"X12				18.5	23	36	52	
1BJ-12-20	G3/4"X14	U1.5/8"X12				18.5	24.5	46	56	
1BJ-16	G1"X11	U1.5/16"X12				20.5	23	41	56	
1BJ-16-08	G1"X11	U3/4"X16				20.5	16.7	41	49	
1BJ-16-10	G1"X11	U7/8"X14				20.5	19.5	41	52	
1BJ-16-12	G1"X11	U1.1/16"X12				20.5	22	41	54	
1BJ-16-20	G1"X11	U1.5/8"X12				20.5	24.5	46	59.5	
1BJ-20	G1.1/4"X11	U1.5/8"X12				20.5	24.5	50	62	
1BJ-20-12	G1.1/4"X11	U1.1/16"X12				20.5	22	50	59	
1BJ-20-16	G1.1/4"X11	U1.5/16"X12				20.5	23	50	60	
1BJ-20-24	G1.1/4"X11	U1.7/8"X12				20.5	27.5	50	65	
1BJ-24-16	G1.1/2"X11	U1.5/16"X12				23	23	55	63	
1BJ-24-20	G1.1/2"X11	U1.5/8"X12				23	24.5	55	64	
1BJ-24	G1.1/2"X11	U1.7/8"X12				23	27.5	55	67	
1BJ-24-32	G1.1/2"X11	U2.1/2"X12				23	34	65	74	
1BJ-32	G2"X11	U2.1/2"X12				25.5	34	70	77	
1BJ-32-24	G2"X11	U1.7/8"X12				25.5	27.5	70	71	

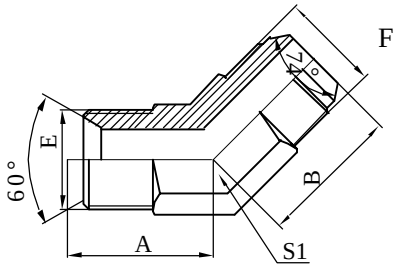

1BJ4

45°英管外螺纹60°内锥/
美制JIC外螺纹74°外锥
45°BSP MALE 60°SEAT/
JIC MALE 74°CONE

代号 PART NO.	螺纹 THREADE					尺 寸 DIMENSIONS				
	E	F				A	B	S1		
1BJ4-04	G1/4"X19	U7/16"X20				22	22	14		
1BJ4-04-05	G1/4"X19	U1/2"X20				22	22	14		
1BJ4-04-06	G1/4"X19	U9/16"X18				22	22	14		
1BJ4-06	G3/8"X19	U9/16"X18				22	22	17		
1BJ4-06-08	G3/8"X19	U3/4"X16				25	25	19		
1BJ4-08	G1/2"X14	U3/4"X16				27	27	22		
1BJ4-08-10	G1/2"X14	U7/8"X14				27	27	22		
1BJ4-10	G5/8"X14	U7/8"X14				33	33	27		
1BJ4-12	G3/4"X14	U1.1/16"X12				33	33	27		
1BJ4-16	G1"X11	U1.5/16"X12				37	37	33		
1BJ4-16-20	G1"X11	U1.5/8"X12				40	40	44		
1BJ4-20	G1.1/4"X11	U1.5/8"X12				40	40	44		
1BJ4-24	G1.1/2"X11	U1.7/8"X12				47	47	53		
1BJ4-32	G2"X11	U2.1/2"X12				55	55	65		

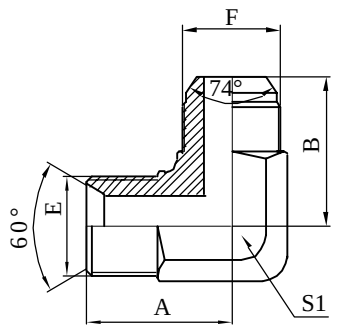

1BJ9

90°英管外螺纹60°内锥/
美制JIC外螺纹74°外锥
90°BSP MALE 60°SEAT/
JIC MALE 74°CONE

代号 PART NO.	螺纹 THREADE					尺 寸 DIMENSIONS				
	E	F				A	B	S1		
1BJ9-04	G1/4"X19	U7/16"X20				27	29	14		
1BJ9-04-05	G1/4"X19	U1/2"X20				27	29	14		
1BJ9-04-06	G1/4"X19	U9/16"X18				27	29	14		
1BJ9-06	G3/8"X19	U9/16"X18				29	30	17		
1BJ9-06-08	G3/8"X19	U3/4"X16				33	33	19		
1BJ9-08	G1/2"X14	U3/4"X16				37	37	22		
1BJ9-08-10	G1/2"X14	U7/8"X14				37	37	22		
1BJ9-10	G5/8"X14	U7/8"X14				40	40	27		
1BJ9-12	G3/4"X14	U1.1/16"X12				40	40	27		
1BJ9-16	G1"X11	U1.5/16"X12				49	49	33		
1BJ9-16-20	G1"X11	U1.5/8"X12				57	57	44		
1BJ9-20	G1.1/4"X11	U1.5/8"X12				57	57	44		
1BJ9-24	G1.1/2"X11	U1.7/8"X12				57	57	48		
1BJ9-32	G2"X11	U2.1/2"X12				66	66	65		

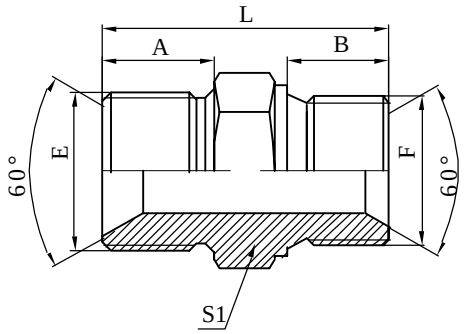

1BM

英管外螺纹60°内锥或六角端面组合垫密封/
公制外螺纹60°内锥或六角端面组合垫密封
BSP MALE 60°SEAT DOUBLE 60°SEAT
BONDED SEAL/METRIC MALE
DOUBLE 60°SEAT BONDED SEAL

代号 PART NO.	螺纹 THREADE					尺 寸 DIMENSIONS				
	E	F				A	B	S1	L	
1BM-02-12	G1/8"X28	M12x1.5				10	10	17	28	
1BM-04-12	G1/4"X19	M12x1.5				12	10	19	30	
1BM-04-14	G1/4"X19	M14x1.5				12	11	19	31	
1BM-04-16	G1/4"X19	M16x1.5				12	12	22	34	
1BM-04-18	G1/4"X19	M18x1.5				12	12	24	34	
1BM-06-12	G3/8"X19	M12x1.5				13.5	10	22	32.5	
1BM-06-14	G3/8"X19	M14x1.5				13.5	11	22	33.5	
1BM-06-16	G3/8"X19	M16x1.5				13.5	12	22	34.5	
1BM-06-18	G3/8"X19	M18x1.5				13.5	12	24	34.5	
1BM-06-22	G3/8"X19	M22x1.5				13.5	14	27	39.5	
1BM-08-14	G1/2"X14	M14x1.5				16	11	27	39	
1BM-08-16	G1/2"X14	M16x1.5				16	12	27	40	
1BM-08-18	G1/2"X14	M18x1.5				16	12	27	40	
1BM-08-22	G1/2"X14	M22x1.5				16	14	27	42	
1BM-10-22	G5/8"X14	M22x1.5				17.5	14	30	43.5	
1BM-12-18	G3/4"X14	M18x1.5				18.5	12	32	42.5	
1BM-12-22	G3/4"X14	M22x1.5				18.5	14	32	44.5	
1BM-16-14	G1"X11	M14x1.5				20.5	11	41	46	
1BM-16-22	G1"X11	M22x1.5				20.5	14	41	49	

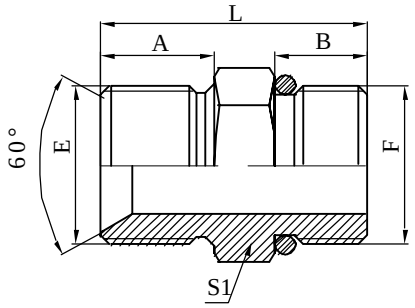

1BO

英管外螺纹60°内锥或六角端面组合垫密封
/美制SAE外螺纹带O型圈轻系列
BSP MALE 60°SEAT BONDED SEAL
/SAE O-RING BOSS L-SERIES

代号 PART NO.	螺纹 THREADE					尺 寸 DIMENSIONS				
	E	F				A	B	S1	L	
1BO-04	G1/4"X19	U7/16"X20				12	10	19	28	
1BO-04-05	G1/4"X19	U1/2"X20				12	10	19	28	
1BO-04-06	G1/4"X19	U9/16"X18				12	12	19	30	
1BO-04-08	G1/4"X19	U3/4"X16				12	12	22	32	
1BO-06	G3/8"X19	U9/16"X18				13.5	12	22	33.5	
1BO-06-04	G3/8"X19	U7/16"X20				13.5	10	22	31.5	
1BO-06-08	G3/8"X19	U3/4"X16				13.5	12	24	33.5	
1BO-06-10	G3/8"X19	U7/8"X14				13.5	13.5	27	37	
1BO-08	G1/2"X14	U3/4"X16				16	12	27	38	
1BO-08-06	G1/2"X14	U9/16"X18				16	12	27	38	
1BO-08-10	G1/2"X14	U7/8"X14				16	13.5	27	39.5	
1BO-08-12	G1/2"X14	U1.1/16"X12				16	16	32	42	
1BO-10	G5/8"X14	U7/8"X14				17.5	13.5	30	41	
1BO-10-08	G5/8"X14	U7/8"X14				17.5	12	30	39.5	
1BO-10-12	G5/8"X14	U1.1/16"X12				17.5	16	32	43.5	
1BO-12	G3/4"X14	U1.1/16"X12				18.5	16	32	44.5	
1BO-12-08	G3/4"X14	U3/4"X16				18.5	12	32	40.5	
1BO-12-10	G3/4"X14	U7/8"X14				18.5	13.5	32	42	
1BO-12-16	G3/4"X14	U1.5/16"X12				18.5	17	41	47.5	
1BO-16	G1"X11	U1.5/16"X12				20.5	17	41	49.5	
1BO-16-10	G1"X11	U7/8"X14				20.5	13.5	41	46	
1BO-16-12	G1"X11	U1.1/16"X12				20.5	16	41	48.5	
1BO-16-20	G1"X11	U1.5/8"X12				20.5	18	50	55.5	
1BO-20	G1.1/4"X11	U1.5/8"X12				20.5	18	50	55.5	
1BO-20-16	G1.1/4"X11	U1.5/16"X12				20.5	17	50	54.5	
1BO-24	G1.1/2"X11	U1.7/8"X12				23	18.5	55	58.5	

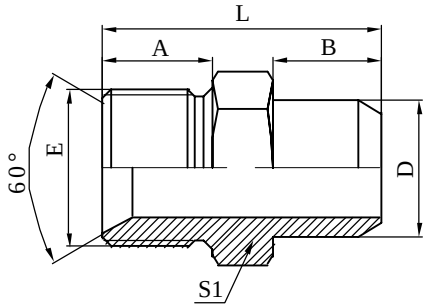

1BW

英管外螺纹60°内锥或六角
端面组合垫密封/焊接管
BSP MALE 60°SEAT BONDED
SEAL/BUTT-WELD TUBE

代号 PART NO.	螺纹 THREADE		管子外径 TUBE O.D.			尺 寸 DIMENSIONS				
	E		D			A	B	S1	L	
1BW-04-10	G1/4"X19		10			12	7	19	25	
1BW-06-14	G3/8"X19		14			13.5	8	22	29.5	
1BW-08-18	G1/2"X14		18			16	10	27	36	
1BW-12-22	G3/4"X14		22			18.5	10	32	38.5	
1BW-12-28	G3/4"X14		28			18.5	12	32	40.5	
1BW-16-28	G1"X11		28			20.5	12	41	44.5	
1BW-16-30	G1"X11		30			20.5	12	41	44.5	
1BW-20-34	G1.1/4"X11		34			20.5	14	50	51.5	
1BW-20-36	G1.1/4"X11		36			20.5	14	50	51.5	
1BW-20-42	G1.1/4"X11		42			20.5	16	50	53.5	
1BW-24-36	G1.1/2"X11		36			23	14	55	54	
1BW-24-42	G1.1/4"X11		42			23	16	55	56	
1BW-24-50	G1.1/2"X11		50			23	16	55	56	

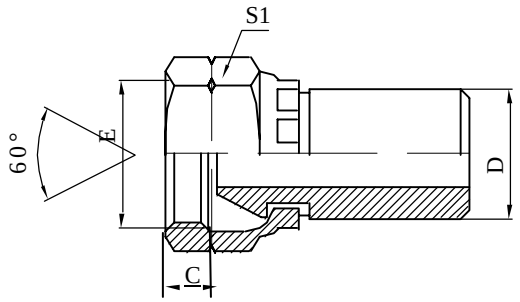

2WB

焊接管/英管内螺纹60°外锥
BUTT-WELD TUBE/BSP FEMALE 60 °CONE

代号 PART NO.	螺纹 THREADE		管子外径 TUBE O.D.			尺 寸 DIMENSIONS				
	E		D			C		S1		
2WB-10-04	G1/4"X19		10			5.5		19		
2WB-14-06	G3/8"X19		14			6.5		22		
2WB-18-08	G1/2"X14		18			8		27		
2WB-22-08	G1/2"X14		22			8		27		
2WB-22-12	G3/4"X14		22			11.5		32		
2WB-28-16	G1"X11		28			11.5		41		
2WB-34-20	G1.1/4"X11		34			12		50		
2WB-42-20	G1.1/4"X11		42			12		50		
2WB-50-24	G1.1/2"X11		50			13		55		

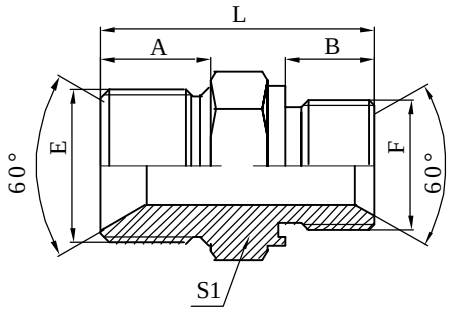

1B-WD

英管外螺纹60°内锥或六角端面组合垫密封
/英管外螺纹胶垫密封
BSP MALE 60°SEAT BONDED SEAL
/BSP MALE CAPTIVE SEAL

代号 PART NO.	螺纹 THREADE					尺 寸 DIMENSIONS				
	E	F				A	B	S1	L	
1B-04WD	G1/4"X19	G1/4"X19				12	12	19	32	
1B-04-06WD	G1/4"X19	G3/8"X19				12	13.5	22	36	
1B-04-08WD	G1/4"X19	G1/2"X14				12	16	27	41	
1B-06WD	G3/8"X19	G3/8"X19				13.5	13.5	22	35.5	
1B-06-08WD	G3/8"X19	G1/2"X14				13.5	16	27	42.5	
1B-08WD	G1/2"X14	G1/2"X14				16	16	27	45	
1B-08-12WD	G1/2"X14	G3/4"X14				16	18.5	32	48.5	
1B-12WD	G3/4"X14	G3/4"X14				18.5	18.5	32	49	
1B-12-16WD	G3/4"X14	G1"X11				18.5	20.5	41	55	
1B-16WD	G1"X11	G1"X11				20.5	20.5	41	57	
1B-16-20WD	G1"X11	G1.1/4"X11				20.5	20.5	50	59	
1B-20WD	G1.1/4"X11	G1.1/4"X11				20.5	20.5	50	59	

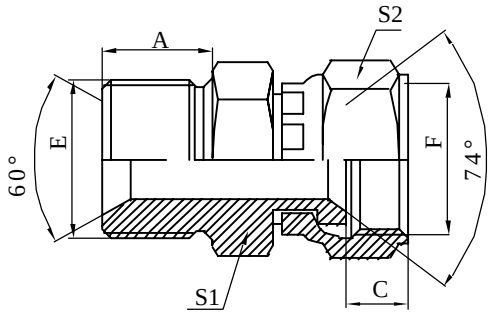

2BJ

英管外螺纹60°内锥或六角端面组
合垫密封/美制JIC内螺纹74°内锥
BSP MALE DOUBLE FOR 60 °SEAT
BONDED SEAL/JIC FEMALE 74 °SEAT

代号 PART NO.	螺纹 THREADE					尺 寸 DIMENSIONS				
	E	F				A	C	S1	S2	
2BJ-02-04	G1/8"X28	U7/16"X20				10	8.5	14	17	
2BJ-02-06	G1/8"X28	U9/16"X18				10	10	14	19	
2BJ-04	G1/4"X19	U7/16"X20				12	8.5	19	17	
2BJ-04-05	G1/4"X19	U1/2"X20				12	9.5	19	19	
2BJ-04-06	G1/4"X19	U9/16"X18				12	10	19	19	
2BJ-04-08	G1/4"X19	U3/4"X16				12	11	19	24	
2BJ-06	G3/8"X19	U9/16"X18				13.5	10	22	19	
2BJ-06-08	G3/8"X19	U3/4"X16				13.5	11	22	24	
2BJ-06-10	G3/8"X19	U7/8"X14				13.5	11	22	27	
2BJ-08	G1/2"X14	U3/4"X16				16	11	27	24	
2BJ-08-06	G1/2"X14	U9/16"X18				16	10	27	19	
2BJ-08-10	G1/2"X14	U7/8"X14				16	11	27	27	
2BJ-10	G5/8"X14	U7/8"X14				17.5	11	30	27	
2BJ-12	G3/4"X14	U1.1/16"X12				18.5	13.5	32	32	
2BJ-12-08	G3/4"X14	U3/4"X16				18.5	11	32	24	
2BJ-12-10	G3/4"X14	U7/8"X14				18.5	11	32	27	
2BJ-12-16	G3/4"X14	U1.5/16"X12				18.5	14.5	32	41	
2BJ-16	G1"X11	U1.5/16"X12				20.5	14.5	41	41	
2BJ-16-20	G1"X11	U1.5/8"X12				20.5	15.5	41	50	
2BJ-20	G1.1/4"X11	U1.5/8"X12				20.5	15.5	50	50	
2BJ-20-24	G1.1/4"X11	U1.7/8"X12				20.5	18.5	50	55	
2BJ-24	G1.1/2"X11	U1.7/8"X12				23	18.5	55	55	
2BJ-32	G2"X11	U2.1/2"X12				25.5	24.5	70	75	

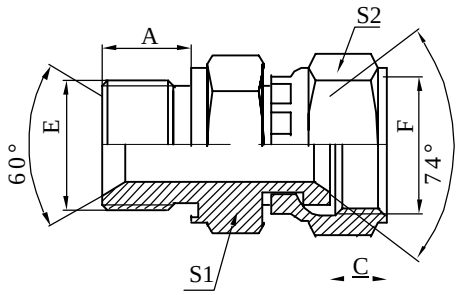

2BJ-WD

英管外螺纹胶垫密封/
美制JIC内螺纹74°内锥
BSP MALE CAPTIVE SEAL/
JIC FEMALE 74°SEAT

代号 PART NO.	螺纹 THREADE					尺 寸 DIMENSIONS				
	E	F				A	C	S1	S2	
2BJ-02-04WD	G1/8"X28	U7/16"X20				10	8.5	14	17	
2BJ-04-05WD	G1/4"X19	U1/2"X20				12	9.5	19	19	
2BJ-04-06WD	G1/4"X19	U9/16"X18				12	10	19	19	
2BJ-04-08WD	G1/4"X19	U3/4"X16				12	11	19	24	
2BJ-04WD	G1/4"X19	U7/16"X20				12	8.5	19	17	
2BJ-06-08WD	G3/8"X19	U3/4"X16				13.5	11	22	24	
2BJ-06WD	G3/8"X19	U9/16"X18				13.5	10	22	19	
2BJ-08-06WD	G1/2"X14	U9/16"X18				16	10	27	19	
2BJ-08-10WD	G1/2"X14	U7/8"X14				16	11	27	27	
2BJ-08WD	G1/2"X14	U3/4"X16				16	11	27	24	
2BJ-12-16WD	G3/4"X14	U1.5/16"X12				18.5	14.5	32	41	
2BJ-12WD	G3/4"X14	U1.1/16"X12				18.5	13.5	32	32	
2BJ-16WD	G1"X11	U1.5/16"X12				20.5	14.5	41	41	
2BJ-20-16WD	G1.1/4"X11	U1.5/16"X12				20.5	14.5	50	41	
2BJ-20WD	G1.1/4"X11	U1.5/8"X12				20.5	15.5	50	50	
2BJ-24WD	G1.1/2"X11	U1.7/8"X12				23	18.5	55	55	

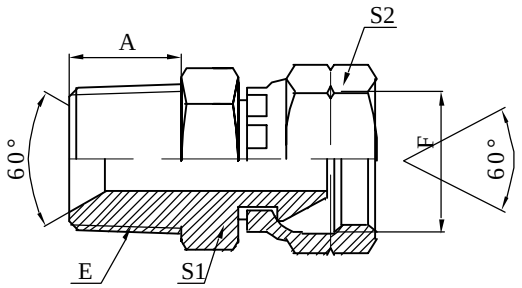

2TB

英锥管外螺纹/英管内螺纹60°外锥
BSPT MALE/BSP FEMALE 60 °CONE

代号 PART NO.	螺纹 THREADE					尺 寸 DIMENSIONS				
	E	F				A	C	S1	S2	
2TB-02	ZG1/8"X28	G1/8"X28				10	5.5	12	14	
2TB-02-04	ZG1/8"X28	G1/4"X19				10	5.5	14	19	
2TB-04	ZG1/4"X19	G1/4"X19				14	5.5	17	19	
2TB-04-06	ZG1/4"X19	G3/8"X19				14	6.5	17	22	
2TB-04-08	ZG1/4"X19	G1/2"X14				14	8	19	27	
2TB-06	ZG3/8"X19	G3/8"X19				14	6.5	19	22	
2TB-06-08	ZG3/8"X19	G1/2"X14				14	8	22	27	
2TB-08	ZG1/2"X14	G1/2"X14				19	8	22	27	
2TB-08-06	ZG1/2"X14	G3/8"X19				19	6.5	22	24	
2TB-08-12	ZG1/2"X14	G3/4"X14				19	11.5	27	32	
2TB-12	ZG3/4"X14	G3/4"X14				19.5	11.5	30	32	
2TB-12-16	ZG3/4"X14	G1"X11				19.5	11.5	32	41	
2TB-16	ZG1"X11	G1"X11				24	11.5	36	41	
2TB-16-20	ZG1"X11	G1.1/4"X11				24	12	41	50	
2TB-20	ZG1.1/4"X11	G1.1/4"X11				25	12	46	50	
2TB-24	ZG1.1/2"X11	G1.1/2"X11				25	13	50	55	
2TB-32	ZG2"X11	G2"X11				29	16	70	70	

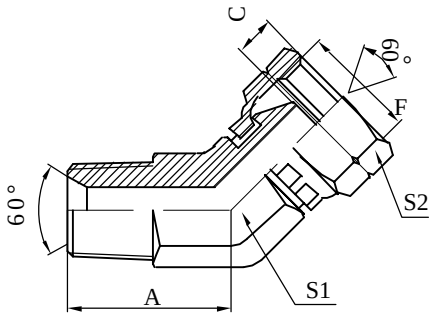

2TB4

45°英锥管外螺纹/英管内螺纹60°外锥
45°BSPT MALE/BSP FEMALE 60°CONE

代号 PART NO.	螺纹 THREADE				尺 寸 DIMENSIONS				
	E	F			A	C	S1	S2	
2TB4-02	ZG1/8"X28	G1/8"X28			20	5.5	11	14	
2TB4-04	ZG1/4"X19	G1/4"X19			22	5.5	14	19	
2TB4-06	ZG3/8"X19	G3/8"X19			22	6.5	17	22	
2TB4-08	ZG1/2"X14	G1/2"X14			27	8	22	27	
2TB4-12	ZG3/4"X14	G3/4"X14			33	11.5	27	32	
2TB4-16	ZG1"X11	G1"X11			37	11.5	33	41	
2NB4-20	ZG1.1/4"X11	G1.1/4"X11			40	12	44	50	
2NB4-24	ZG1.1/2"X11	G1.1/2"X11			47	13	53	55	

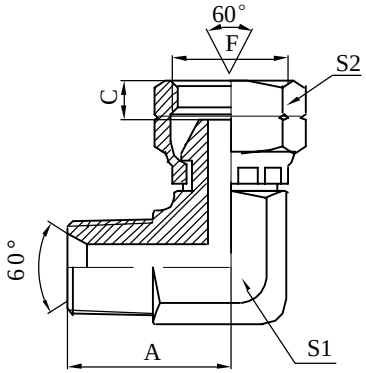

2TB9

90°英锥管外螺纹/英管内螺纹60°外锥
90°BSPT MALE/BSP FEMALE 60°CONE

代号 PART NO.	螺纹 THREADE				尺 寸 DIMENSIONS				
	E	F			A	C	S1	S2	
2TB9-02	ZG1/8"X28	G1/8"X28			23	5.5	11	14	
2TB9-04	ZG1/4"X19	G1/4"X19			29	5.5	14	19	
2TB9-06	ZG3/8"X19	G3/8"X19			30	6.5	17	22	
2TB9-08	ZG1/2"X14	G1/2"X14			37	8	22	27	
2TB9-12	ZG3/4"X14	G3/4"X14			40	11.5	27	32	
2TB9-16	ZG1"X11	G1"X11			49	11.5	33	41	
2NB9-20	ZG1.1/4"X11	G1.1/4"X11			57	12	44	50	
2NB9-24	ZG1.1/2"X11	G1.1/2"X11			57	13	48	55	

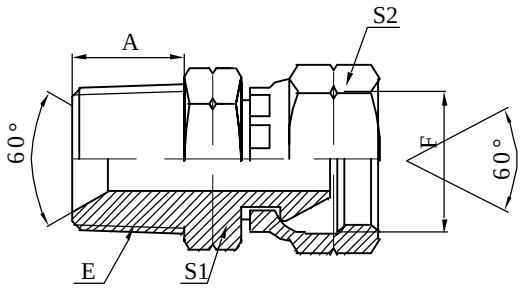

2NB

布锥管外螺纹/英管内螺纹60°外锥
NPT MALE/BSP FEMALE 60 °CONE

代号 PART NO.	螺纹 THREADE					尺 寸 DIMENSIONS				
	E	F				A	C	S1	S2	
2NB-02	Z1/8"X27	G1/8"X28				10	5.5	12	14	
2NB-02-04	Z1/8"X27	G1/4"X19				10	5.5	14	19	
2NB-04	Z1/4"X18	G1/4"X19				14	5.5	17	19	
2NB-04-06	Z1/4"X18	G3/8"X19				14	6.5	17	22	
2NB-04-08	Z1/4"X18	G1/2"X14				14	8	19	27	
2NB-06	Z3/8"X18	G3/8"X19				14	6.5	19	22	
2NB-06-08	Z3/8"X18	G1/2"X14				14	8	22	27	
2NB-08	Z1/2"X14	G1/2"X14				19	8	22	27	
2NB-08-06	Z1/2"X14	G3/8"X19				19	6.5	22	24	
2NB-08-12	Z1/2"X14	G3/4"X14				19	11.5	27	32	
2NB-12	Z3/4"X14	G3/4"X14				19.5	11.5	30	32	
2NB-12-16	Z3/4"X14	G1"X11				19.5	11.5	32	41	
2NB-16	Z1"X11.5	G1"X11				24	11.5	36	41	
2NB-16-20	Z1"X11.5	G1.1/4"X11				24	12	41	50	
2NB-20	Z1.1/4"X11.5	G1.1/4"X11				25	12	46	50	
2NB-24	Z1.1/2"X11.5	G1.1/2"X11				25	13	50	55	
2NB-32	Z2"X11.5	G2"X11				29	16	70	70	

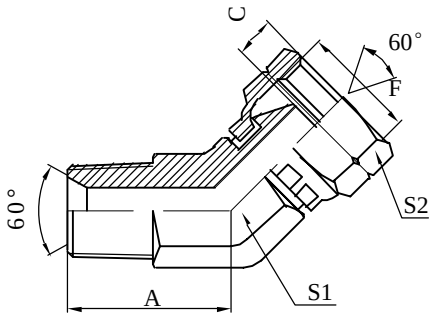

2NB4

45°布锥管外螺纹/英管内螺纹60°外锥
45°NPT MALE/BSP FEMALE 60°CONE

代号 PART NO.	螺纹 THREADE					尺 寸 DIMENSIONS				
	E	F				A	C	S1	S2	
2NB4-02	Z1/8"X27	G1/8"X28				20	5.5	11	14	
2NB4-04	Z1/4"X18	G1/4"X19				22	5.5	14	19	
2NB4-04-06	Z1/4"X18	G3/8"X19				22	6.5	17	22	
2NB4-06	Z3/8"X18	G3/8"X19				22	6.5	17	22	
2NB4-06-04	Z3/8"X18	G1/4"X19				22	5.5	17	19	
2NB4-06-08	Z3/8"X18	G1/2"X14				25	8	19	27	
2NB4-08	Z1/2"X14	G1/2"X14				27	8	22	27	
2NB4-08-06	Z1/2"X14	G3/8"X19				27	6.5	22	22	
2NB4-12	Z3/4"X14	G3/4"X14				33	11.5	27	32	
2NB4-12-08	Z3/4"X14	G1/2"X14				33	8	27	27	
2NB4-12-16	Z3/4"X14	G1"X11				37	11.5	33	41	
2NB4-16	Z1"X11.5	G1"X11				37	11.5	33	41	
2NB4-16-12	Z1"X11.5	G3/4"X14				37	11.5	33	32	
2NB4-20	Z1.1/4"X11.5	G1.1/4"X11				40	12	44	50	
2NB4-24	Z1.1/2"X11.5	G1.1/2"X11				47	13	53	55	
2NB4-32	Z2"X11.5	G2"X11				55	16	65	70	

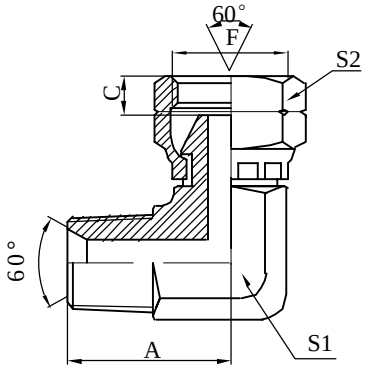

2NB9

90°布锥管外螺纹/英管内螺纹60°外锥
90°NPT MALE/BSP FEMALE 60°CONE

代号 PART NO.	螺纹 THREADE					尺 寸 DIMENSIONS				
	E	F				A	C	S1	S2	
2NB9-02	Z1/8"X27	G1/8"X28				23	5.5	11	14	
2NB9-04	Z1/4"X18	G1/4"X19				29	5.5	14	19	
2NB9-04-06	Z1/4"X18	G3/8"X19				30	6.5	17	22	
2NB9-06	Z3/8"X18	G3/8"X19				30	6.5	17	22	
2NB9-06-04	Z3/8"X18	G1/4"X19				30	5.5	17	19	
2NB9-06-08	Z3/8"X18	G1/2"X14				33	8	19	27	
2NB9-08	Z1/2"X14	G1/2"X14				37	8	22	27	
2NB9-08-06	Z1/2"X14	G3/8"X19				37	6.5	22	22	
2NB9-12	Z3/4"X14	G3/4"X14				40	11.5	27	32	
2NB9-12-08	Z3/4"X14	G1/2"X14				40	8	27	27	
2NB9-12-16	Z3/4"X14	G1"X11				49	11.5	33	41	
2NB9-16	Z1"X11.5	G1"X11				49	11.5	33	41	
2NB9-16-12	Z1"X11.5	G3/4"X14				49	11.5	33	32	
2NB9-20	Z1.1/4"X11.5	G1.1/4"X11				57	12	44	50	
2NB9-24	Z1.1/2"X11.5	G1.1/2"X11				57	13	48	55	
2NB9-32	Z2"X11.5	G2"X11				66	16	65	70	

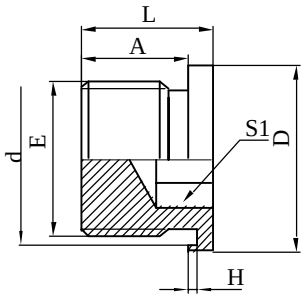

4BN-WD

英管外螺纹胶垫密封内六角堵头
BSP MALE CAPTIVE SEAL HOLLOW HEX PLUG

代号 PART NO.	螺纹 THREADE				尺 寸 DIMENSIONS					
	E				A	d	D	S1	H	L
4BN-04WD	G1/4"X19				12	16.3	19	6	1.2	17.3
4BN-06WD	G3/8"X19				12	18.7	22	8	1.2	17.3
4BN-08WD	G1/2"X14				14	23.7	27	10	1.2	19.3
4BN-12WD	G3/4"X14				16	29	32	12	1.2	21.3
4BN-16WD	G1"X11				16	35.5	40	14	1.6	22.8

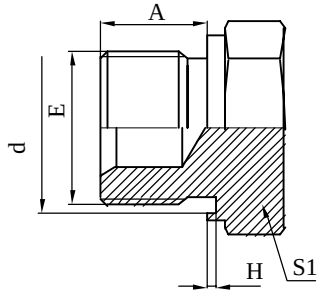

4B-WD

英管外螺纹胶垫密封堵头
BSP MALE CAPTIVE SEAL PLUG

代号 PART NO.	螺纹 THREADE					尺 寸 DIMENSIONS				
	E					A	d	S1	H	
4B-04WD	G1/4"X19					12	16.3	19	1.2	
4B-06WD	G3/8"X19					12	18.7	22	1.2	
4B-08WD	G1/2"X14					14	23.7	27	1.2	
4B-12WD	G3/4"X14					16	29	32	1.2	
4B-16WD	G1"X11					16	35.5	41	1.6	

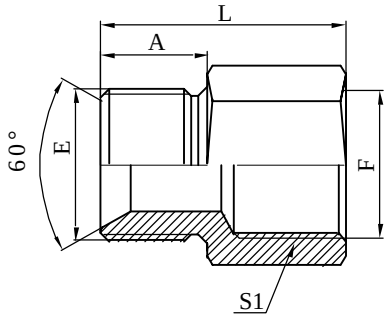

5B

英管外螺纹60°内锥或六角端
面组合垫密封/英管内螺纹
BSP MALE DOUBLE FOR 60° SEAT
BONDED SEAL/BSP FEMALE

代号 PART NO.	螺纹 THREADE					尺 寸 DIMENSIONS				
	E	F				A		S1		L
5B-02-04	G1/8"X28	G1/4"X19				10		19		28
5B-04-02	G1/4"X19	G1/8"X28				12		19		30
5B-04	G1/4"X19	G1/4"X19				12		19		30
5B-04-06	G1/4"X19	G3/8"X19				12		22		32
5B-06-04	G3/8"X19	G1/4"X19				13.5		22		33.5
5B-06	G3/8"X19	G3/8"X19				13.5		22		33.5
5B-06-08	G3/8"X19	G1/2"X14				13.5		27		33.5
5B-08-06	G1/2"X14	G3/8"X19				16		27		36
5B-08	G1/2"X14	G1/2"X14				16		27		36
5B-08-10	G1/2"X14	G5/8"X14				16		30		42
5B-08-12	G1/2"X14	G3/4"X14				16		32		40
5B-10-08	G5/8"X14	G1/2"X14				17.5		30		44
5B-12-08	G3/4"X14	G1/2"X14				18.5		32		43
5B-12	G3/4"X14	G3/4"X14				18.5		32		42.5
5B-12-16	G3/4"X14	G1"X11				18.5		41		52.5
5B-16-12	G1"X11	G3/4"X14				20.5		41		54.5
5B-16	G1"X11	G1"X11				20.5		41		54.5
5B-16-20	G1"X11	G1.1/4"X11				20.5		50		37.5
5B-20-16	G1.1/4"X11	G1"X11				20.5		50		57.5
5B-20	G1.1/4"X11	G1.1/4"X11				20.5		50		56.5
5B-20-24	G1.1/4"X11	G1.1/2"X11				20.5		55		57.5
5B-24	G1.1/2"X11	G1.1/2"X11				23		55		60
5B-32-24	G2"X11	G1.1/2"X11				23		70		60
5B-32	G2"X11	G2"X11				25.5		70		62.5

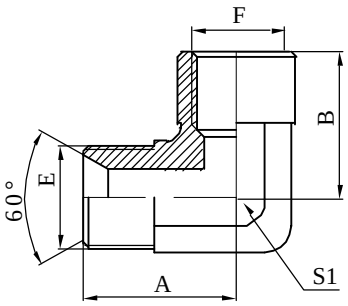

5B9

90°英管外螺纹60°内锥/英管内螺纹
90°BSP MALE 60°SEAT/BSP FEMALE

代号 PART NO.	螺纹 THREADE					尺 寸 DIMENSIONS				
	E	F				A	B	S1		
5B9-02	G1/8"X28	G1/4"X19				22	17	14		
5B9-04	G1/4"X19	G1/4"X19				27	21	17		
5B9-06	G3/8"X19	G3/8"X19				32	27	22		
5B9-08	G1/2"X14	G1/2"X14				35	30	27		
5B9-12	G3/4"X14	G3/4"X14				40	32	33		
5B9-16	G1"X11	G1"X11				49	38	41		

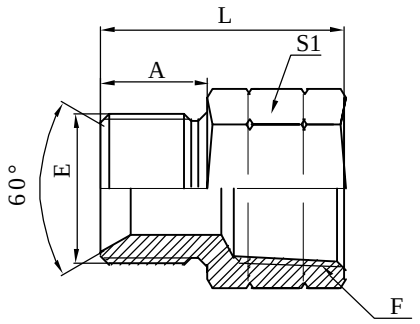

5BN

英管外螺纹60°内锥或六角端面组
合垫密封/美制布锥管内螺纹
BSP MALE DOUBLE FOR 60 °EAT
BONEDE SEAL/NPT FEMALE

代号 PART NO.	螺纹 THREADE					尺 寸 DIMENSIONS				
	E	F				A		S1		L
5BN-04	G1/4"X19	Z1/4"X18				12		19		30
5BN-06	G3/8"X19	Z3/8"X18				13.5		22		33.5
5BN-08	G1/2"X14	Z1/2"X14				16		27		36
5BN-12	G3/4"X14	Z3/4"X14				18.5		32		42.5
5BN-16	G1"X11	Z1"X11.5				20.5		41		54.5
5BN-20	G1.1/4"X11	Z1.1/4"X11.5				20.5		50		57.5
5BN-24	G1.1/2"X11	Z1.1/2"X11.5				23		55		60
5BN-32	G2"X11	Z2"X11.5				25.5		70		62.5

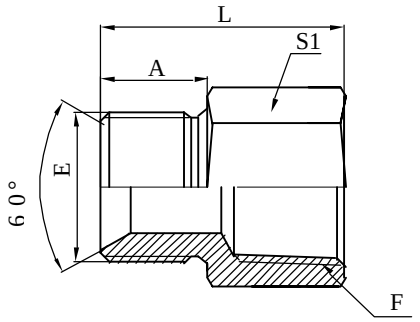

5BT

英管外螺纹60°内锥或六角端面组
合垫密封/英锥管内螺纹
BSP MALE DOUBLE FOR 60° SEAT
BONEDE SEAL/BSPT FEMALE

代号 PART NO.	螺纹 THREADE					尺 寸 DIMENSIONS				
	E	F				A		S1		L
5BT-04	G1/4"X19	ZG1/4"X19				12		19		30
5BT-06	G3/8"X19	ZG3/8"X19				13.5		22		33.5
5BT-08	G1/2"X14	ZG1/2"X14				16		27		36
5BT-12	G3/4"X14	ZG3/4"X14				18.5		32		42.5
5BT-16	G1"X11	ZG1"X11				20.5		41		54.5
5BT-20	G1.1/4"X11	ZG1.1/4"X11				20.5		50		57.5
5BT-24	G1.1/2"X11	ZG1.1/2"X11				23		55		60
5BT-32	G2"X11	ZG2"X11				25.5		70		62.5

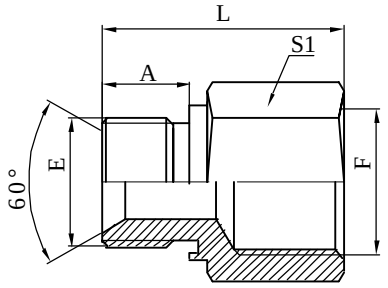

5B-WD

英管外螺纹胶垫密封/英管内螺纹
BSP MALE CAPTIVE SEAL/BSP FEMALE

代号 PART NO.	螺纹 THREADE					尺 寸 DIMENSIONS				
	E	F				A		S1		L
5B-02-04WD	G1/8"X28	G1/4"X19				10		19		28
5B-02-06WD	G1/8"X28	G3/8"X19				10		22		30
5B-04-02WD	G1/4"X19	G1/8"X28				12		19		30
5B-04-06WD	G1/4"X19	G3/8"X19				12		22		32
5B-04-08WD	G1/4"X19	G1/2"X14				12		27		32
5B-06-02WD	G3/8"X19	G1/8"X28				13.5		22		33.5
5B-06-04WD	G3/8"X19	G1/4"X19				13.5		22		33.5
5B-06-08WD	G3/8"X19	G1/2"X14				13.5		27		33.5
5B-08-04WD	G1/2"X14	G1/4"X19				16		22		36
5B-08-06WD	G1/2"X14	G3/8"X19				16		27		36
5B-08-12WD	G1/2"X14	G3/4"X14				16		32		40
5B-12-08WD	G3/4"X14	G1/2"X14				18.5		32		42.5
5B-12-16WD	G3/4"X14	G1"X11				18.5		41		52.5
5B-12-20WD	G3/4"X14	G1.1/4"X11				18.5		50		52.5
5B-16-12WD	G1"X11	G3/4"X14				20.5		41		54.5
5B-16-20WD	G1"X11	G1.1/4"X11				20.5		50		56.5
5B-20-16WD	G1.1/4"X11	G1"X11				20.5		50		56.5
5B-20-24WD	G1.1/4"X11	G1.1/2"X11				20.5		55		57.5
5B-20-32WD	G1.1/4"X11	G2"X11				20.5		70		57.5
5B-24-16WD	G1.1/2"X11	G1"X11				23		55		60
5B-24-20WD	G1.1/2"X11	G1.1/4"X11				23		55		60
5B-24-32WD	G1.1/2"X11	G2"X11				23		70		60

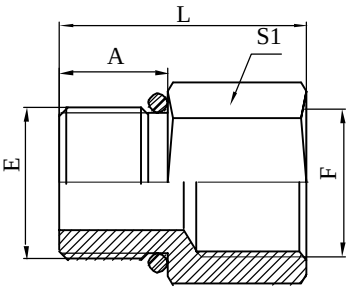

5GB

英管外螺纹O型圈/英管内螺纹
BSP MALE O-RING/BSP FEMALE

代号 PART NO.	螺纹 THREADE					尺 寸 DIMENSIONS				
	E	F				A		S1		L
5GB-04	G1/4"X19	G1/4"X19				12		19		30
5GB-04-06	G1/4"X19	G3/8"X19				12		22		32
5GB-06	G3/8"X19	G3/8"X19				13.5		22		33.5
5GB-06-08	G3/8"X19	G1/2"X14				13.5		27		33.5
5GB-08	G1/2"X14	G1/2"X14				16		27		36
5GB-08-12	G3/4"X14	G3/4"X14				16		32		40
5GB-12	G3/4"X14	G3/4"X14				18.5		32		42.5
5GB-12-16	G3/4"X14	G1"X11				18.5		41		52.5
5GB-16-12	G1"X11	G3/4"X14				20.5		41		33
5GB-16	G1"X11	G1"X11				20.5		41		54.5

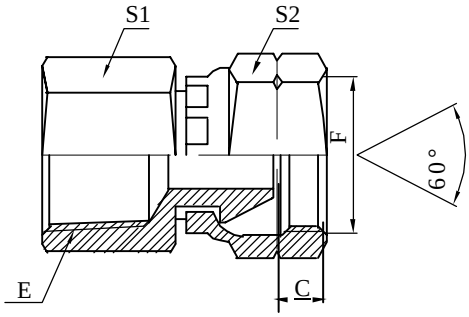

7TB

英锥管内螺纹/英管内螺纹60 °外锥
BSPT FEMALE/BSP FEMALE 60 °CONE

代号 PART NO.	螺纹 THREADE					尺 寸 DIMENSIONS				
	E	F				C	S1	S2		
7TB-02-04	ZG1/8"X28	G1/4"X19				5.5	17	19		
7TB-04	ZG1/4"X19	G1/4"X19				5.5	19	19		
7TB-04-06	ZG1/4"X19	G3/8"X19				6.5	22	22		
7TB-06	ZG3/8"X19	G3/8"X19				6.5	22	22		
7TB-06-08	ZG3/8"X19	G1/2"X14				8	27	27		
7TB-08-06	ZG1/2"X14	G3/8"X19				6.5	27	22		
7TB-08	ZG1/2"X14	G1/2"X14				8	27	27		
7TB-12	ZG3/4"X14	G3/4"X14				11.5	32	32		
7TB-16	ZG1"X11	G1"X11				11.5	41	41		

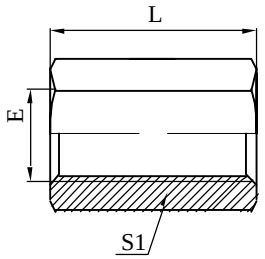

7B

英管内螺纹
BSP FEMALE

代号 PART NO.	螺纹 THREADE					尺 寸 DIMENSIONS				
	E	F				L		S1		
7B-02	G1/8"X28	G1/8"X28				22		14		
7B-04	G1/4"X19	G1/4"X19				24		19		
7B-06	G3/8"X19	G3/8"X19				26		22		
7B-08	G1/2"X14	G1/2"X14				32		27		
7B-10	G5/8"X14	G5/8"X14				36		30		
7B-12	G3/4"X14	G3/4"X14				36		32		
7B-16	G1"X11	G1"X11				40		41		
7B-20	G1.1/4"X11	G1.1/4"X11				44		50		
7B-24	G1.1/2"X11	G1.1/2"X11				45		55		
7B-32	G2"X11	G2"X11				54		70		

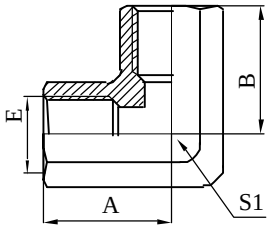

7B9

90°英管内螺纹
90°BSP FEMALE

代号 PART NO.	螺纹 THREADE					尺 寸 DIMENSIONS				
	E					A	B	S1		
7B9-02	G1/8"X28					17	17	14		
7B9-04	G1/4"X19					21	21	17		
7B9-06	G3/8"X19					24	24	22		
7B9-08	G1/2"X14					27	27	26		
7B9-12	G3/4"X14					33	33	34		
7B9-16	G1"X11					38	38	41		
7B9-20	G1.1/4"X11					45	45	54		
7B9-24	G1.1/2"X11					47	47	56		
7B9-32	G2"X11					60	60	68		

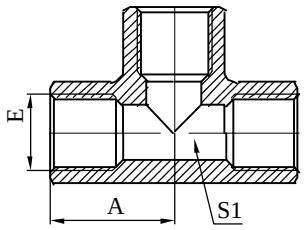

GB

英管内螺纹三通
BSP FEMALE TEE

代号 PART NO.	螺纹 THREADE					尺 寸 DIMENSIONS				
	E					A		S1		
GB-02	G1/8"X28					17		14		
GB-04	G1/4"X19					21		17		
GB-06	G3/8"X19					24		22		
GB-08	G1/2"X14					27		26		
GB-12	G3/4"X14					33		34		
GB-16	G1"X11					38		41		
GB-20	G1.1/4"X11					45		54		
GB-24	G1.1/2"X11					47		56		
GB-32	G2"X11					60		68		

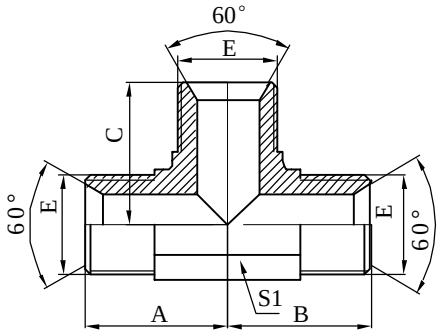

AB

英管外螺纹60°内锥三通
BSP MALE 60 °SEAT TEE

代号 PART NO.	螺纹 THREADE				尺 寸 DIMENSIONS				
	E	F	G		A	B	C	S1	
AB-02	G1/8"X28	G1/8"X28	G1/8"X28		24	24	24	11	
AB-04	G1/4"X19	G1/4"X19	G1/4"X19		27	27	27	14	
AB-06	G3/8"X19	G3/8"X19	G3/8"X19		28	28	28	17	
AB-08	G1/2"X14	G1/2"X14	G1/2"X14		33	33	33	22	
AB-10	G5/8"X14	G5/8"X14	G5/8"X14		33	33	33	22	
AB-12	G3/4"X14	G3/4"X14	G3/4"X14		40	40	40	27	
AB-16	G1"X11	G1"X11	G1"X11		49	49	49	33	
AB-20	G1.1/4"X11	G1.1/4"X11	G1.1/4"X11		57	57	57	44	

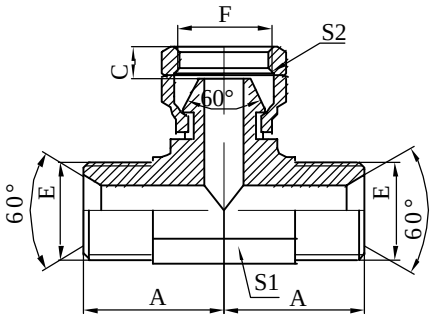

BB

英管外螺纹60°内锥/
英管内螺纹外锥分支三通
BSP MALE 60°SEAT/
BSP FEMALE 60°CONE BRANCH TEE

代号 PART NO.	螺纹 THREADE				尺 寸 DIMENSIONS				
	E	F			A	C	S1	S2	
BB-02	G1/8"X28	G1/8"X28			24	5.5	11	14	
BB-04	G1/4"X19	G1/4"X19			27	5.5	14	19	
BB-06	G3/8"X19	G1/4"X19			28	6.5	17	22	
BB-08	G1/2"X14	G1/2"X14			33	8	22	27	
BB-12	G3/4"X14	G3/4"X14			40	11.5	27	32	
BB-16	G1"X11	G1"X11			49	11.5	33	41	
BB-20	G1.1/4"X11	G1.1/4"X11			57	12	44	50	

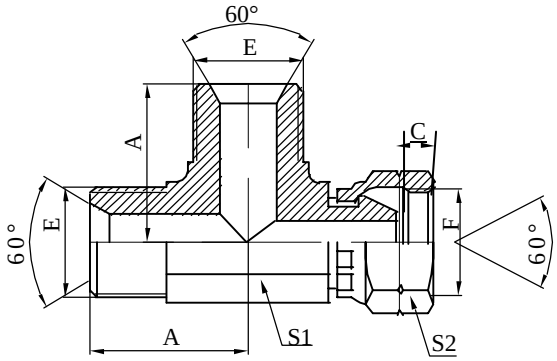

CB

英管外螺纹60°内锥/
英管内螺纹外锥主支三通
BSP MALE 60° SEAT/
BSP FEMALE 60° CONE RUN TEE

代号 PART NO.	螺纹 THREADE				尺 寸 DIMENSIONS				
	E	F			A	C	S1	S2	
CB-02	G1/8"X28	G1/8"X28			24	5.5	11	14	
CB-04	G1/4"X19	G1/4"X19			27	5.5	14	19	
CB-06	G3/8"X19	G1/4"X19			28	6.5	17	22	
CB-08	G1/2"X14	G1/2"X14			33	8	22	27	
CB-12	G3/4"X14	G3/4"X14			40	11.5	27	32	
CB-16	G1"X11	G1"X11			49	11.5	33	41	
CB-20	G1.1/4"X11	G1.1/4"X11			57	12	44	50	

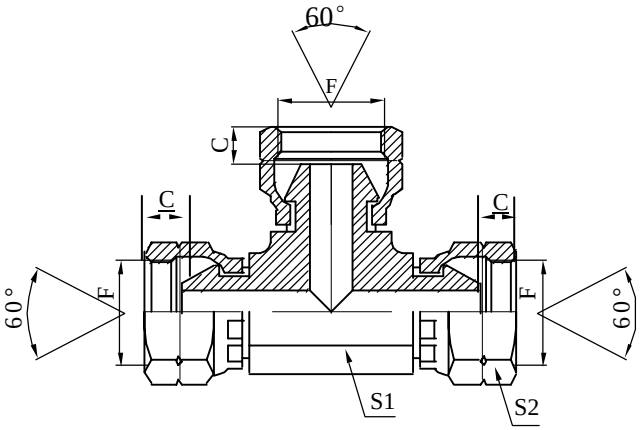

DB

英管内螺纹外锥三通
BSP FEMALE 60°CONE TEE

代号 PART NO.	螺纹 THREADE				尺 寸 DIMENSIONS				
	E	F				C	S1	S2	
DB-02	G1/8"X28	G1/8"X28				5.5	11	14	
DB-04	G1/4"X19	G1/4"X19				5.5	14	19	
DB-06	G3/8"X19	G1/4"X19				6.5	17	22	
DB-08	G1/2"X14	G1/2"X14				8	22	27	
DB-12	G3/4"X14	G3/4"X14				11.5	27	32	
DB-16	G1"X11	G1"X11				11.5	33	41	
DB-20	G1.1/4"X11	G1.1/4"X11				12	44	50	

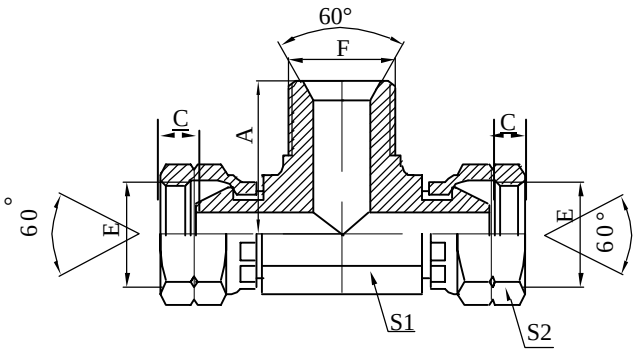

EB

英管内螺纹60°外锥/
英管外螺纹60°内锥分支三通
BSP FEMALE 60°CONE/
BSP MALE 60° BRANCH TEE

代号 PART NO.	螺纹 THREADE				尺 寸 DIMENSIONS				
	E	F			A	C	S1	S2	
EB-02	G1/8"X28	G1/8"X28			24	5.5	11	14	
EB-04	G1/4"X19	G1/4"X19			27	5.5	14	19	
EB-06	G3/8"X19	G1/4"X19			28	6.5	17	22	
EB-08	G1/2"X14	G1/2"X14			33	8	22	27	
EB-12	G3/4"X14	G3/4"X14			40	11.5	27	32	
EB-16	G1"X11	G1"X11			49	11.5	33	41	
EB-20	G1.1/4"X11	G1.1/4"X11			57	12	44	50	

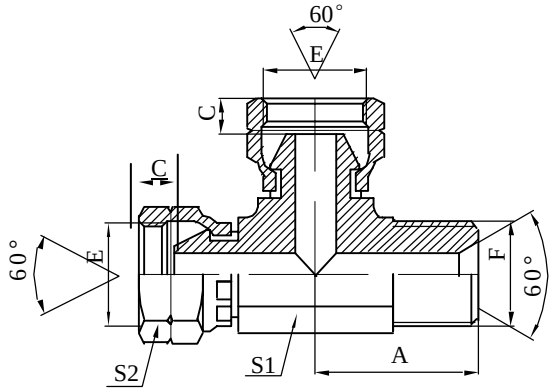

B

英管内螺纹60°外锥/
英管外螺纹60°内锥分支三通
BSP FEMALE 60°CONE/
BSP MALE 60°BRANCH TEE

代号 PART NO.	螺纹 THREADE				尺 寸 DIMENSIONS				
	E	F			A	C	S1	S2	
FB-02	G1/8"X28	G1/8"X28			24	5.5	11	14	
FB-04	G1/4"X19	G1/4"X19			27	5.5	14	19	
FB-06	G3/8"X19	G1/4"X19			28	6.5	17	22	
FB-08	G1/2"X14	G1/2"X14			33	8	22	27	
FB-12	G3/4"X14	G3/4"X14			40	11.5	27	32	
FB-16	G1"X11	G1"X11			49	11.5	33	41	
FB-20	G1.1/4"X11	G1.1/4"X11			57	12	44	50	

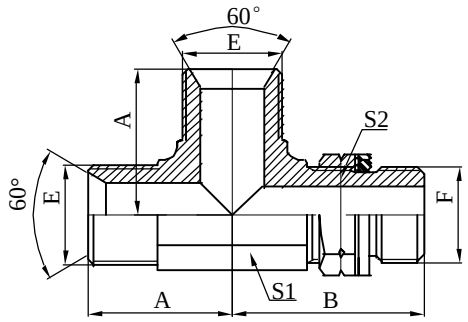

ABBG-OG

英管外螺纹60°内锥/英管外
螺纹O型圈可调向柱端主支三通
BSP MALE 60°SEAT/BSP MALE
O-RING ADJUSTABLE STUD END RUN TEE

代号 PART NO.	螺纹 THREADE				尺 寸 DIMENSIONS				
	E	F	G		A	B	S1	S2	
ABBG-04OG	G1/4"X19	G1/4"X19	G1/4"X19		27	24.5	14	19	
ABBG-04-04-06OG	G1/4"X19	G1/4"X19	G3/8"X19		28	26.5	17	19	
ABBG-06OG	G3/8"X19	G3/8"X19	G3/8"X19		28	27.5	17	22	
ABBG-06-06-08OG	G3/8"X19	G3/8"X19	G1/2"X19		33	31	22	22	
ABBG-08OG	G1/2"X14	G1/2"X14	G1/2"X14		33	34.5	22	27	
ABBG-12OG	G3/4"X14	G3/4"X14	G3/4"X14		33	40	24	32	
ABBG-16OG	G1"X11	G1"X11	G1"X11		49	46	33	41	

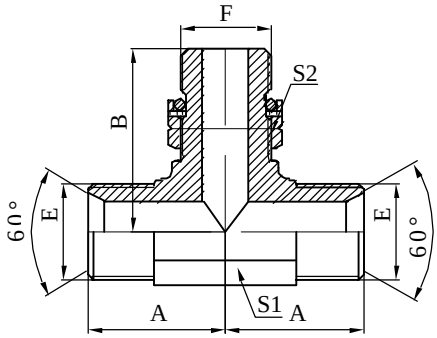

ABGB-OG

英管外螺纹60°内锥/英管外
螺纹O型圈可调向柱端分支三通
BSP MALE 60°SEAT/BSP MALEO-RING
ADJUSTABLE STUD END BRANCH TEE

代号 PART NO.	螺纹 THREADE				尺 寸 DIMENSIONS				
	E	F	G		A	B	S1	S2	
ABGB-04OG	G1/4"X19	G1/4"X19	G1/4"X19		27	31.8	14	19	
ABGB-06-04-06OG	G1/4"X19	G1/4"X19	G3/8"X19		28	33.5	17	19	
ABGB-06OG	G3/8"X19	G3/8"X19	G3/8"X19		28	36.8	17	22	
ABGB-08-06-08OG	G3/8"X19	G3/8"X19	G1/2"X19		33	39.5	22	22	
ABGB-08OG	G1/2"X14	G1/2"X14	G1/2"X14		33	43.2	22	27	
ABGB-12-08-12OG	G3/4"X14	G1/2"X14	G3/4"X14		33	46.5	24	27	
ABGB-12OG	G3/4"X14	G3/4"X14	G3/4"X14		33	49.3	24	32	
ABGB-16OG	G1"X11	G1"X11	G1"X11		49	53	33	41	

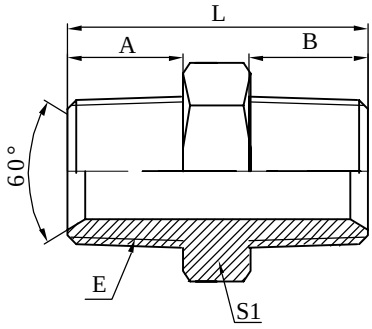

1T

英锥管外螺纹
BSPT MALE

代号 PART NO.	螺纹 THREADE					尺 寸 DIMENSIONS				
	E	F				A	B	S1		L
1T-02	ZG1/8"X28	ZG1/8"X28				10	10	12		26
1T-02-04	ZG1/8"X28	ZG1/4"X19				10	14	14		30
1T-02-06	ZG1/8"X28	ZG3/8"X19				10	14	17		30
1T-04	ZG1/4"X19	ZG1/4"X19				14	14	14		34
1T-04-06	ZG1/4"X19	ZG3/8"X19				14	14	17		34
1T-04-08	ZG1/4"X19	ZG1/2"X14				14	19	22		41.5
1T-06	ZG3/8"X19	ZG3/8"X19				14	14	17		34
1T-06-08	ZG3/8"X19	ZG1/2"X14				14	19	22		41
1T-08	ZG1/2"X14	ZG1/2"X14				19	19	22		46
1T-08-12	ZG1/2"X14	ZG3/4"X14				19	19.5	27		47
1T-12	ZG3/4"X14	ZG3/4"X14				19.5	19.5	27		48
1T-12-16	ZG3/4"X14	ZG1"X11				19.5	24	36		53
1T-16	ZG1"X11	ZG1"X11				24	24	36		58
1T-16-20	ZG1"X11	ZG1.1/4"X11				24	25	46		62
1T-20	ZG1.1/4"X11	ZG1.1/4"X11				25	25	46		63
1T-20-24	ZG1.1/4"X11	ZG1.1/2"X11				25	25	50		65
1T-24	ZG1.1/2"X11	ZG1.1/2"X11				25	25	50		65
1T-24-32	ZG1.1/2"X11	ZG2"X11				25	29	70		72
1T-32	ZG2"X11	ZG2"X11				29	29	70		75

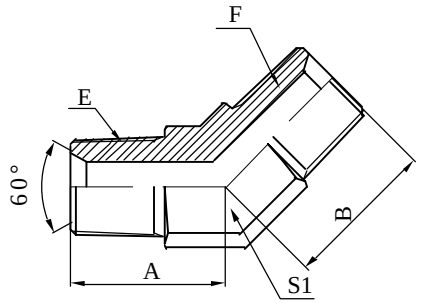

1T4

45°英锥管外螺纹
45°BSPT MALE

代号 PART NO.	螺纹 THREADE					尺 寸 DIMENSIONS				
	E	F				A	B	S1		
1T4-02	ZG1/8"X28	ZG1/8"X28				19	21	11		
1T4-04	ZG1/4"X19	ZG1/4"X19				22	27	14		
1T4-06	ZG3/8"X19	ZG3/8"X19				22	29	17		
1T4-08	ZG1/2"X14	ZG1/2"X14				27	37	22		
1T4-12	ZG3/4"X14	ZG3/4"X14				33	43	27		
1T4-16	ZG1"X11	ZG1"X11				37	47	33		
1T4-20	ZG1.1/4"X11	ZG1.1/4"X11				40	56	44		
1T4-24	ZG1.1/2"X11	ZG1.1/2"X11				47	57	53		
1T4-32	ZG2"X11	ZG2"X11				55	63	65		

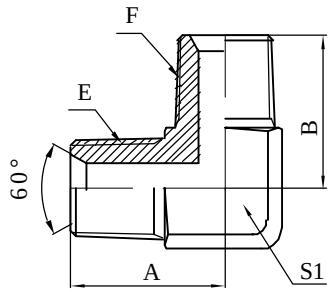

1T9

90°英锥管外螺纹
90°BSPT MALE

代号 PART NO.	螺纹 THREADE					尺 寸 DIMENSIONS				
	E	F				A	B	S1		
1T9-02	ZG1/8"X28	ZG1/8"X28				22	22	11		
1T9-04	ZG1/4"X19	ZG1/4"X19				29	27	14		
1T9-06	ZG3/8"X19	ZG3/8"X19				30	29	17		
1T9-08	ZG1/2"X14	ZG1/2"X14				37	37	22		
1T9-12	ZG3/4"X14	ZG3/4"X14				40	40	27		
1T9-16	ZG1"X11	ZG1"X11				49	49	33		
1T9-20	ZG1.1/4"X11	ZG1.1/4"X11				57	57	44		
1T9-24	ZG1.1/2"X11	ZG1.1/2"X11				57	57	48		
1T9-32	ZG2"X11	ZG2"X11				66	66	65		

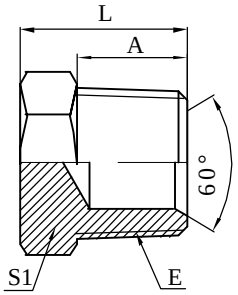

4T

英锥管外螺纹堵头
BSPT MALE PLUG

代号 PART NO.	螺纹 THREADE					尺 寸 DIMENSIONS				
	E					A		S1		L
4T-02	ZG1/8"X28					10		12		16
4T-04	ZG1/4"X19					14		17		20
4T-06	ZG3/8"X19					14		19		21
4T-08	ZG1/2"X14					19		22		27
4T-12	ZG3/4"X14					19.5		30		29
4T-16	ZG1"X11					24		36		36
4T-20	ZG1.1/4"X11					25		46		38
4T-24	ZG1.1/2"X11					25		50		41
4T-32	ZG2"X11					29		65		46

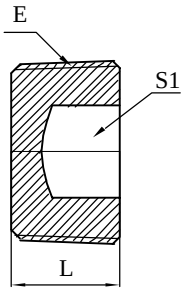

4TN

英锥管外螺纹内六角堵头
BSPT MALE HOLLOW HEX PLUG

代号 PART NO.	螺纹 THREADE					尺 寸 DIMENSIONS				
	E					L		S1		
4TN-02	ZG1/8"X28					8		5		
4TN-04	ZG1/4"X19					10		6		
4TN-06	ZG3/8"X19					12		8		
4TN-08	ZG1/2"X14					15		10		
4TN-12	ZG3/4"X14					18		12		
4TN-16	ZG1"X11					20		17		
4TN-20	ZG1.1/4"X11					22		22		

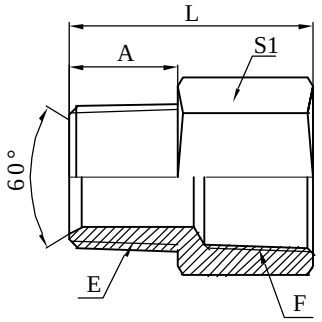

5T

英锥管外螺纹/英锥管内螺纹
BSPT MALE/BSPT FEMALE

代号 PART NO.	螺纹 THREADE					尺 寸 DIMENSIONS				
	E	F				A		S1		L
5T-02	ZG1/8"X28	ZG1/8"X28				10		14		25
5T-02-04	ZG1/8"X28	ZG1/4"X19				10		19		28
5T-04-02	ZG1/4"X19	ZG1/8"X28				14		17		20
5T-04	ZG1/4"X19	ZG1/4"X19				14		19		32
5T-04-06	ZG1/4"X19	ZG3/8"X19				14		22		34
5T-06-02	ZG3/8"X19	ZG1/8"X28				14		19		21
5T-06-04	ZG3/8"X19	ZG1/4"X19				14		19		21
5T-06-06	ZG3/8"X19	ZG3/8"X19				14		24		34
5T-06-08	ZG3/8"X19	ZG1/2"X14				14		30		40
5T-08-02	ZG1/2"X14	ZG3/4"X14				19		24		27
5T-08-04	ZG1/2"X14	ZG1/4"X19				19		24		27
5T-08-06	ZG1/2"X14	ZG3/8"X19				19		24		27
5T-08-12	ZG1/2"X14	ZG3/4"X14				19		36		49
5T-12-04	ZG3/4"X14	ZG1/4"X19				19.5		27		29
5T-12-06	ZG3/4"X14	ZG3/8"X19				19.5		27		29
5T-12-08	ZG3/4"X14	ZG1/2"X14				19.5		30		29
5T-12-16	ZG3/4"X14	ZG1"X11				19.5		41		54
5T-12-20	ZG3/4"X14	ZG1.1/4"X11				19.5		50		56
5T-16-06	ZG1"X11	ZG3/8"X19				24		36		34
5T-16-08	ZG1"X11	ZG1/2"X14				24		36		34
5T-16-12	ZG1"X11	ZG3/4"X14				24		36		34
5T-16-16	ZG1"X11	ZG1"X11				24		41		58
5T-20-12	ZG1.1/4"X11	ZG3/4"X14				25		46		38
5T-20-16	ZG1.1/4"X11	ZG1"X11				25		46		38
5T-24-16	ZG1.1/2"X11	ZG1"X11				25		50		42
5T-24-20	ZG1.1/2"X11	ZG1.1/4"X11				25		50		42
5T-32-16	ZG2"X11	ZG1"X11				29		65		47
5T-32-20	ZG2"X11	ZG1.1/4"X11				29		65		47
5T-32-24	ZG2"X11	ZG1.1/2"X11				29		65		47

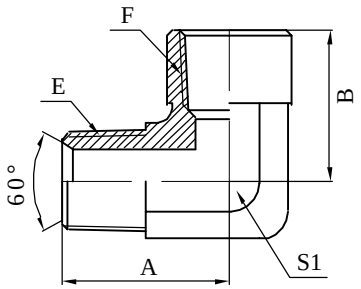

5T9

90°英锥管外螺纹/英锥管内螺纹
90°BSPT MALE/BSPT FEMALE

代号 PART NO.	螺纹 THREADE					尺 寸 DIMENSIONS				
	E	F				A	B	S1		
5T9-02	ZG1/8"X28	ZG1/8"X28				30	23	17		
5T9-04	ZG1/4"X19	ZG1/4"X19				33	25	19		
5T9-06	ZG3/8"X19	ZG3/8"X19				37	25	22		
5T9-08	ZG1/2"X14	ZG1/2"X14				43	31.5	27		
5T9-12	ZG3/4"X14	ZG3/4"X14				52	37	33		
5T9-16	ZG1"X11	ZG1"X11				59	43	44		
5T9-20	ZG1.1/4"X11	ZG1.1/4"X11				61	50	50		
5T9-24	ZG1.1/2"X11	ZG1.1/2"X11				65	55	65		

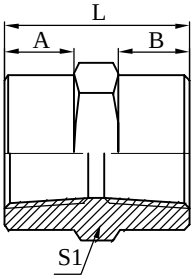

7T

英锥管内螺纹
BSPT FEMALE

代号 PART NO.	螺纹 THREADE					尺 寸 DIMENSIONS				
	E	F				A	B	S1	L	
7T-02	ZG1/8"X28	ZG1/8"X28				8	8	14	22	
7T-04-02	ZG1/4"X19	ZG1/8"X28				10	8	19	26	
7T-04	ZG1/4"X19	ZG1/4"X19				10	10	19	28	
7T-06-04	ZG3/8"X19	ZG1/4"X19				10	8	19	26	
7T-06	ZG3/8"X19	ZG3/8"X19				11	11	19	28	
7T-08-04	ZG1/2"X14	ZG1/4"X19				14	10	27	34	
7T-08	ZG1/2"X14	ZG1/2"X14				14	14	27	38	
7T-12	ZG3/4"X14	ZG3/4"X14				15.5	15.5	36	42	
7T-16	ZG1"X11	ZG1"X11				17	17	41	50	
7T-20	ZG1.1/4"X11	ZG1.1/4"X11				19	19	50	55	
7T-24	ZG1.1/2"X11	ZG1.1/2"X11				19	19	55	55	
7T-32	ZG2"X11	ZG2"X11				21	21	70	60	

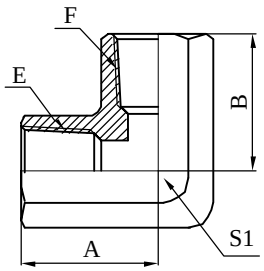

7T9

90°英锥管内螺纹
90°BSPT FEMALE

代号 PART NO.	螺纹 THREADE					尺 寸 DIMENSIONS				
	E	F				A	B	S1		
7T9-02	ZG1/8"X28	ZG1/8"X28				17	17	14		
7T9-02-04	ZG1/8"X28	ZG1/4"X19				21	21	17		
7T9-04	ZG1/4"X19	ZG1/4"X19				21	21	17		
7T9-06	ZG3/8"X19	ZG3/8"X19				24	24	22		
7T9-08	ZG1/2"X14	ZG1/2"X14				27	27	26		
7T9-12	ZG3/4"X14	ZG3/4"X14				33	33	34		
7T9-16	ZG1"X11	ZG1"X11				38	38	41		
7T9-20	ZG1.1/4"X11	ZG1.1/4"X11				45	45	54		
7T9-24	ZG1.1/2"X11	ZG1.1/2"X11				47	47	56		
7T9-32	ZG2"X11	ZG2"X11				60	60	68		

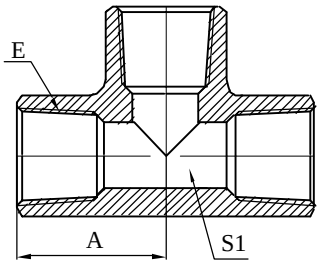

GT

英锥管内螺纹三通
BSPT FEMALE TEE

代号 PART NO.	螺纹 THREADE					尺 寸 DIMENSIONS				
	E					A		S1		
GT-02	ZG1/8"X28					17		14		
GT-04	ZG1/4"X19					21		17		
GT-06	ZG3/8"X19					24		22		
GT-08	ZG1/2"X14					27		26		
GT-12	ZG3/4"X14					33		34		
GT-16	ZG1"X11					38		41		
GT-20	ZG1.1/4"X11					45		54		
GT-24	ZG1.1/2"X11					47		56		
GT-32	ZG2"X11					60		68		

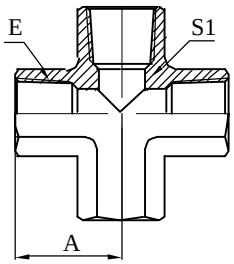

ZT

英锥管内螺纹四通
BSPT FEMALE CROSS

代号 PART NO.	螺纹 THREADE					尺 寸 DIMENSIONS				
	E					A		S1		
ZT-02	ZG1/8"X28					17		14		
ZT-04	ZG1/4"X19					21		17		
ZT-06	ZG3/8"X19					24		22		
ZT-08	ZG1/2"X14					27		26		
ZT-12	ZG3/4"X14					33		34		
ZT-16	ZG1"X11					38		41		
ZT-20	ZG1.1/4"X11					45		54		

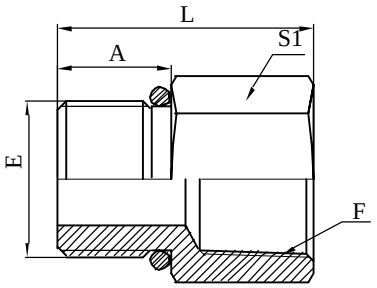

5GT

英管外螺纹O型圈/英锥管内螺纹
BSP MALE O-RING/BSPT FEMALE

代号 PART NO.	螺纹 THREADE					尺 寸 DIMENSIONS				
	E	F				A		S1		L
5GT-02	G1/8"X28	ZG1/8"X28				9		14		24
5GT-04	G1/4"X19	ZG1/4"X19				12		19		30
5GT-06	G3/8"X19	ZG3/8"X19				13.5		22		33.5
5GT-08-06	G1/2"X14	ZG3/8"X19				16		27		36
5GT-08	G1/2"X14	ZG1/2"X14				16		27		36
5GT-12	G3/4"X14	ZG3/4"X14				18.5		36		49
5GT-16	G1"X11	ZG1"X11				20.5		41		55

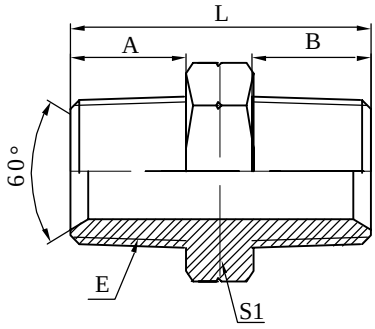

1N

美制布锥管外螺纹
NPT MALE

代号 PART NO.	螺纹 THREADE					尺 寸 DIMENSIONS				
	E	F				A	B	S1		L
1N-02	Z1/8"X27	Z1/8"X27				10	10	12		26
1N-02-04	Z1/8"X27	Z1/4"X18				10	14	14		30
1N-02-06	Z1/8"X27	Z3/8"X18				10	14	17		30
1N-04	Z1/4"X18	Z1/4"X18				14	14	14		34
1N-04-06	Z1/4"X18	Z3/8"X18				14	14	17		34
1N-04-08	Z1/4"X18	Z1/2"X14				14	19	22		41.5
1N-06	Z3/8"X18	Z3/8"X18				14	14	17		34
1N-06-08	Z3/8"X18	Z1/2"X14				14	19	22		41
1N-08	Z1/2"X14	Z1/2"X14				19	19	22		46
1N-08-12	Z1/2"X14	Z3/4"X14				19	19.5	27		47
1N-12	Z3/4"X14	Z3/4"X14				19.5	19.5	27		48
1N-12-16	Z3/4"X14	Z1"X11.5				19.5	24	36		53
1N-16	Z1"X11.5	Z1"X11.5				24	24	36		58
1N-16-20	Z1"X11.5	Z1.1/4"X11.5				24	25	46		62
1N-20	Z1.1/4"X11.5	Z1.1/4"X11.5				25	25	46		63
1N-20-24	Z1.1/4"X11.5	Z1.1/2"X11.5				25	25	50		65
1N-24	Z1.1/2"X11.5	Z1.1/2"X11.5				25	25	50		65
1N-24-32	Z1.1/2"X11.5	Z2"X11.5				25	29	70		72
1N-32	Z2"X11.5	Z2"X11.5				29	29	70		75

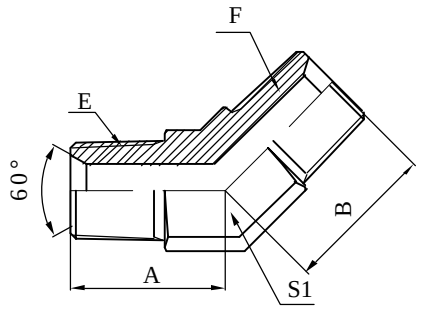

1N4

45°美制布锥管外螺纹
45°NPT MALE

代号 PART NO.	螺纹 THREADE					尺 寸 DIMENSIONS				
	E	F				A	B	S1		
1N4-02	Z1/8"X27	Z1/8"X27				19	21	11		
1N4-04	Z1/4"X18	Z1/4"X18				22	27	14		
1N4-06	Z3/8"X18	Z3/8"X18				22	29	17		
1N4-08	Z1/2"X14	Z1/2"X14				27	37	22		
1N4-12	Z3/4"X14	Z3/4"X14				33	43	27		
1N4-16	Z1"X11.5	Z1"X11.5				37	47	33		
1N4-20	Z1.1/4"X11.5	Z1.1/4"X11.5				40	56	44		
1N4-24	Z1.1/2"X11.5	Z1.1/2"X11.5				47	57	53		
1N4-32	Z2"X11.5	Z2"X11.5				55	63	65		

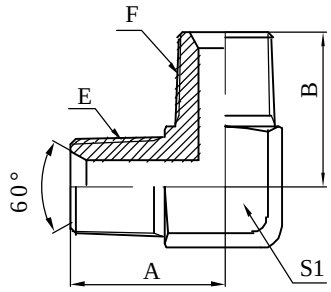

1N9

90°美制布锥管外螺纹
90°NPT MALE

代号 PART NO.	螺纹 THREADE					尺 寸 DIMENSIONS				
	E	F				A	B	S1		
1N9-02	Z1/8"X27	Z1/8"X27				22	22	11		
1N9-04	Z1/4"X18	Z1/4"X18				29	27	14		
1N9-06	Z3/8"X18	Z3/8"X18				30	29	17		
1N9-08	Z1/2"X14	Z1/2"X14				37	37	22		
1N9-12	Z3/4"X14	Z3/4"X14				40	40	27		
1N9-16	Z1"X11.5	Z1"X11.5				49	49	33		
1N9-20	Z1.1/4"X11.5	Z1.1/4"X11.5				57	57	44		
1N9-24	Z1.1/2"X11.5	Z1.1/2"X11.5				57	57	48		
1N9-32	Z2"X11.5	Z2"X11.5				66	66	65		

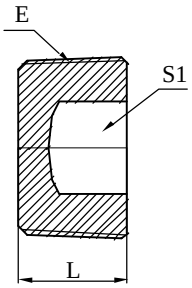

4NN

美制布锥管外螺纹内六角堵头
NPT MALE HOLLOW HEX PLUG

代号 PART NO.	螺纹 THREADE					尺 寸 DIMENSIONS				
	E					L		S1		
4NN-02	Z1/8"X27					8		5		
4NN-04	Z1/4"X18					10		6		
4NN-06	Z3/8"X18					12		8		
4NN-08	Z1/2"X14					15		10		
4NN-12	Z3/4"X14					18		12		
4NN-16	Z1"X11.5					20		17		

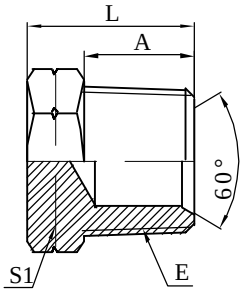

4N

美制布锥管外螺纹堵头
NPT MALE PLUG

代号 PART NO.	螺纹 THREADE					尺 寸 DIMENSIONS				
	E					A		S1		L
4N-02	Z1/8"X27					10		12		16
4N-04	Z1/4"X18					14		17		20
4N-06	Z3/8"X18					14		19		21
4N-08	Z1/2"X14					19		22		27
4N-12	Z3/4"X14					19.5		30		29
4N-16	Z1"X11.5					24		36		36
4N-20	Z1.1/4"X11.5					25		46		38
4N-24	Z1.1/2"X11.5					25		50		41
4N-32	Z2"X11.5					29		65		46

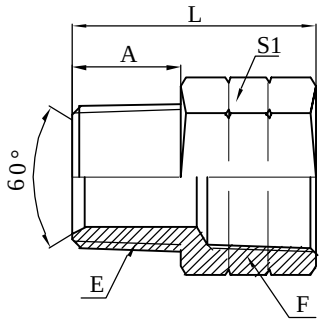

5N

美制布锥管外螺纹/布锥管内螺纹
NPT MALE/NPT FEMALE

代号 PART NO.	螺纹 THREADE					尺 寸 DIMENSIONS				
	E	F				A		S1		L
5N-02	Z1/8"X27	Z1/8"X27				10		14		25
5N-02-04	Z1/8"X27	Z1/4"X18				10		19		28
5N-04-02	Z1/4"X18	Z1/8"X27				14		17		20
5N-04	Z1/4"X18	Z1/4"X18				14		19		32
5N-04-06	Z1/4"X18	Z3/8"X18				14		22		34
5N-06-02	Z3/8"X18	Z1/8"X28				14		19		21
5N-06-04	Z3/8"X18	Z1/4"X18				14		19		21
5N-06-06	Z3/8"X18	Z3/8"X18				14		24		34
5N-06-08	Z3/8"X18	Z1/2"X14				14		30		40
5N-08-02	Z1/2"X14	Z3/4"X14				19		24		27
5N-08-04	Z1/2"X14	Z1/4"X18				19		24		27
5N-08-06	Z1/2"X14	Z3/8"X18				19		24		27
5N-08-12	Z1/2"X14	Z3/4"X14				19		36		49
5N-12-04	Z3/4"X14	Z1/4"X18				19.5		27		29
5N-12-06	Z3/4"X14	Z3/8"X18				19.5		27		29
5N-12-08	Z3/4"X14	Z1/2"X14				19.5		30		29
5N-12-16	Z3/4"X14	Z1"X11.5				19.5		41		54
5N-12-20	Z3/4"X14	Z1.1/4"X11.5				19.5		50		56
5N-16-06	Z1"X11.5	Z3/8"X18				24		36		34
5N-16-08	Z1"X11.5	Z1/2"X14				24		36		34
5N-16-12	Z1"X11.5	Z3/4"X14				24		36		34
5N-16-16	Z1"X11.5	Z1"X11.5				24		41		58
5N-20-12	Z1.1/4"X11.5	Z3/4"X14				25		46		38
5N-20-16	Z1.1/4"X11.5	Z1"X11.5				25		46		38
5N-24-16	Z1.1/2"X11.5	Z1"X11.5				25		50		42
5N-24-20	Z1.1/2"X11.5	Z1.1/4"X11.5				25		50		42
5N-32-16	Z2"X11.5	Z1"X11.5				29		65		47
5N-32-20	Z2"X11.5	Z1.1/4"X11.5				29		65		47
5N-32-24	Z2"X11.5	Z1.1/2"X11.5				29		65		47

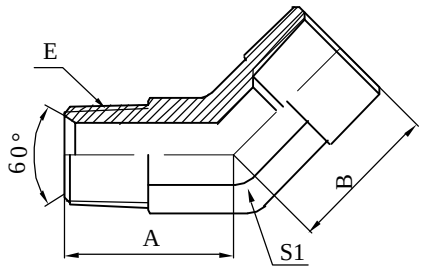

5N4

45°美制布锥管外螺纹/布锥管内螺纹
45°NPT MALE/NPT FEMALE

代号 PART NO.	螺纹 THREADE					尺 寸 DIMENSIONS				
	E					A	B	S1		
5N4-02	Z1/8"X27					22	17	17		
5N4-04	Z1/4"X18					25	20	19		
5N4-06	Z3/8"X18					27	19	22		
5N4-08	Z1/2"X14					33	28	27		
5N4-12	Z3/4"X14					37	30	33		
5N4-16	Z1"X11.5					40	37.5	44		
5N4-20	Z1.1/4"X11.5					47	30	50		
5N4-24	Z1.1/2"X11.5					55	36	65		

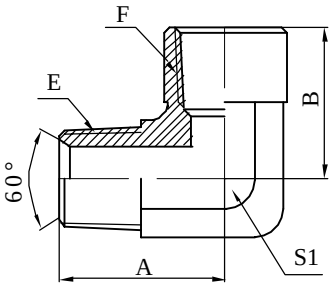

5N9

90°美制布锥管外螺纹/布锥管内螺纹
90°NPT MALE/NPT FEMALE

代号 PART NO.	螺纹 THREADE					尺 寸 DIMENSIONS				
	E	F				A	B	S1		
5N9-02	Z1/8"X27	Z1/8"X27				22	17	14		
5N9-04-02	Z1/4"X18	Z1/8"X27				27	21	17		
5N9-04	Z1/4"X18	Z1/4"X18				27	21	17		
5N9-04-06	Z1/4"X18	Z3/8"X18				32	27	22		
5N9-06	Z3/8"X18	Z3/8"X18				32	27	22		
5N9-08	Z1/2"X14	Z1/2"X14				35	30	27		
5N9-12-08	Z3/4"X14	Z1/2"X14				40	32	33		
5N9-12	Z3/4"X14	Z3/4"X14				40	32	33		
5N9-16	Z1"X11.5	Z1"X11.5				49	38	41		
5N9-20	Z1.1/4"X11.5	Z1.1/4"X11.5				61	43.2	50		
5N9-24	Z1.1/2"X11.5	Z1.1/2"X11.5				65	52.8	65		
5N9-32	Z2"X11.5	Z2"X11.5				65	62	65		

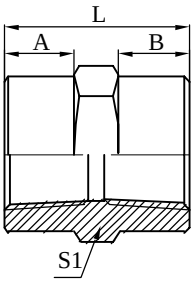

7N

美制布锥管内螺纹
NPT FEMALE

代号 PART NO.	螺纹 THREADE					尺 寸 DIMENSIONS				
	E	F				A	B	S1	L	
7N-02	Z1/8"X27	Z1/8"X27				8	8	14	22	
7N-04-02	Z1/4"X18	Z1/8"X27				10	8	19	26	
7N-04	Z1/4"X18	Z1/4"X18				10	10	19	28	
7N-06-04	Z3/8"X18	Z1/4"X18				10	8	19	26	
7N-06	Z3/8"X18	Z3/8"X18				11	11	19	28	
7N-08-04	Z1/2"X14	Z1/4"X18				14	10	27	34	
7N-08	Z1/2"X14	Z1/2"X14				14	14	27	38	
7N-12	Z3/4"X14	Z3/4"X14				15.5	15.5	36	42	
7N-16	Z1"X11.5	Z1"X11.5				17	17	41	50	
7N-20	Z1.1/4"X11.5	Z1.1/4"X11.5				19	19	50	55	
7N-24	Z1.1/2"X11.5	Z1.1/2"X11.5				19	19	55	55	
7N-32	Z2"X11.5	Z2"X11.5				21	21	70	60	

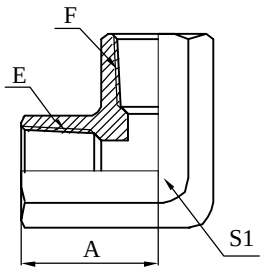

7N9

90°美制布锥管内螺纹
90°NPT FEMALE

代号 PART NO.	螺纹 THREADE					尺 寸 DIMENSIONS				
	E	F				A		S1		
7N9-02	Z1/8"X27	Z1/8"X27				17		14		
7N9-02-04	Z1/8"X27	Z1/4"X18				21		17		
7N9-04	Z1/4"X18	Z1/4"X18				21		17		
7N9-06	Z3/8"X18	Z3/8"X18				24		22		
7N9-08	Z1/2"X14	Z1/2"X14				27		26		
7N9-12	Z3/4"X14	Z3/4"X14				33		34		
7N9-16	Z1"X11.5	Z1"X11.5				38		41		
7N9-20	Z1.1/4"X11.5	Z1.1/4"X11.5				45		54		
7N9-24	Z1.1/2"X11.5	Z1.1/2"X11.5				47		56		
7N9-32	Z2"X11.5	Z2"X11.5				60		68		

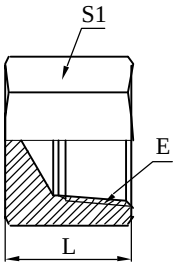

9N-CAP

美制布锥管内螺纹堵头
NPT FEMALE PLUG

代号 PART NO.	螺纹 THREADE					尺 寸 DIMENSIONS				
	E					A		S1		
9N-02CAP	Z1/8"X27					17.5		17		
9N-04CAP	Z1/4"X18					23		19		
9N-06CAP	Z3/8"X18					24		24		
9N-08CAP	Z1/2"X14					28		30		
9N-12CAP	Z3/4"X14					28		36		
9N-16CAP	Z1"X11.5					34		46		
9N-20CAP	Z1.1/4"X11.5					37		55		
9N-24CAP	Z1.1/2"X11.5					37		65		
9N-32CAP	Z2"X11.5					40.5		75		

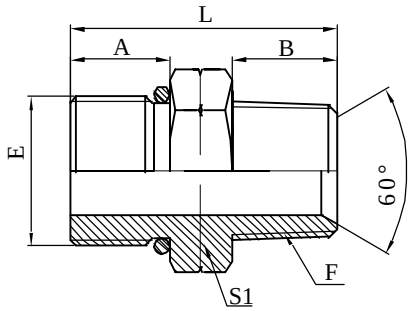

1NO

美制SAE外螺纹带O型圈/美制布锥管外螺纹
NPT MALE/SAE O-RING BOSS

代号 PART NO.	螺纹 THREADE					尺 寸 DIMENSIONS				
	E	F				A	B	S1	L	
1ON-04	U7/16"X20	Z1/4"X18				10	14	19	30	
1ON-04-06	U9/16"X18	Z1/4"X18				12	14	22	32	
1ON-06-04	U7/16"X20	Z3/8"X18				10	14	19	30	
1ON-06	U9/16"X18	Z3/8"X18				12	14	22	34	
1ON-06-08	U3/4"X16	Z3/8"X18				12	14	27	36	
1ON-08	U3/4"X16	Z1/2"X14				12	19	27	41	
1ON-08-10	U7/8"X14	Z1/2"X14				13.5	19	30	42.5	
1ON-08-12	U1.1/16"X12	Z1/2"X14				16	19	32	45	
1ON-12-10	U7/8"X14	Z3/4"X14				13.5	19.5	30	43	
1ON-12	U1.1/16"X12	Z3/4"X14				16	19.5	32	45.5	
1ON-16	U1.5/16"X12	Z1"X11.5				16	24	41	52	
1ON-20-16	U1.5/16"X12	Z1.1/4"X11.5				16	25	46	54	
1ON-20	U1.5/8"X12	Z1.1/4"X11.5				18	25	50	60	
1ON-24	U1.7/8"X12	Z1.1/2"X11.5				18.5	25	55	60.5	

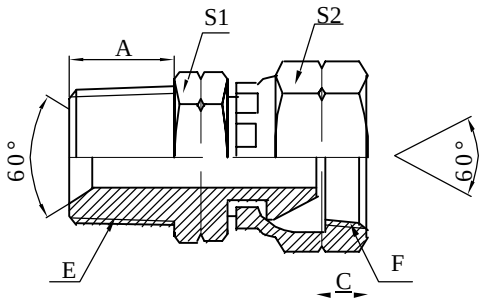

2NU

布锥管外螺纹/美制NPSM内螺纹60°外锥
NPT MALE/NPSM FEMALE 60 °CONE

代号 PART NO.	螺纹 THREADE					尺 寸 DIMENSIONS				
	E	F				A	C	S1	S2	
2NU-02	Z1/8"X27	Z1/8"X27				10	5.5	12	14	
2NU-02-04	Z1/8"X27	Z1/4"X18				10	5.5	12	19	
2NU-04-02	Z1/4"X18	Z1/8"X27				14	5.5	14	14	
2NU-04	Z1/4"X18	Z1/4"X18				14	5.5	14	19	
2NU-04-06	Z1/4"X18	Z3/8"X18				14	6.5	17	22	
2NU-04-08	Z1/4"X18	Z1/2"X14				14	8	19	27	
2NU-06	Z3/8"X18	Z3/8"X18				14	6.5	19	22	
2NU-06-04	Z3/8"X18	Z1/4"X18				14	5.5	19	19	
2NU-06-08	Z3/8"X18	Z1/2"X14				14	8	19	27	
2NU-08	Z1/2"X14	Z1/2"X14				19	8	22	27	
2NU-08-04	Z1/2"X14	Z1/4"X18				19	5.5	22	19	
2NU-08-06	Z1/2"X14	Z3/8"X18				19	6.5	22	22	
2NU-12	Z3/4"X14	Z3/4"X14				19.5	11.5	27	32	
2NU-12-06	Z3/4"X14	Z3/8"X18				19.5	6.5	27	22	
2NU-12-08	Z3/4"X14	Z1/2"X14				19.5	8	27	27	
2NU-12-16	Z3/4"X14	Z1"X11.5				19.5	11.5	36	41	
2NU-16-12	Z1"X11.5	Z3/4"X14				24	11.5	36	32	
2NU-16	Z1"X11.5	Z1"X11.5				24	11.5	36	41	
2NU-16-20	Z1"X11.5	Z1.1/4"X11.5				24	12	41	50	
2NU-20-16	Z1.1/4"X11.5	Z1"X11.5				25	11.5	46	41	
2NU-20	Z1.1/4"X11.5	Z1.1/4"X11.5				25	12	46	50	
2NU-20-24	Z1.1/4"X11.5	Z1.1/2"X11.5				25	13	41	55	
2NU-24-20	Z1.1/2"X11.5	Z1.1/4"X11.5				25	12	46	50	
2NU-24	Z1.1/2"X11.5	Z1.1/2"X11.5				25	13	50	55	
2NU-32	Z2"X11.5	Z2"X11.5				29	16	65	70	

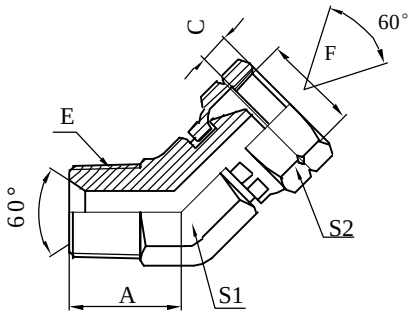

2NU4

45°布锥管外螺纹/美制NPSM内螺纹60°外锥
45°NPT MALE/NPSM FEMALE 60°CONE

代号 PART NO.	螺纹 THREADE					尺 寸 DIMENSIONS				
	E	F				A	C	S1	S2	
2NU4-02	Z1/8"X27	Z1/8"X27				17	5.5	11	14	
2NU4-04	Z1/4"X18	Z1/4"X18				22	5.5	14	19	
2NU4-04-06	Z1/4"X18	Z3/8"X18				22	6.5	17	22	
2NU4-06	Z3/8"X18	Z3/8"X18				22	6.5	17	22	
2NU4-06-04	Z3/8"X18	Z1/4"X18				22	5.5	17	19	
2NU4-06-08	Z3/8"X18	Z1/2"X14				25	8	19	27	
2NU4-08	Z1/2"X14	Z1/2"X14				27	8	22	27	
2NU4-08-06	Z1/2"X14	Z3/8"X18				27	6.5	22	22	
2NU4-08-12	Z1/2"X14	Z3/4"X14				33	11.5	27	32	
2NU4-12	Z3/4"X14	Z3/4"X14				33	11.5	27	32	
2NU4-12-08	Z3/4"X14	Z1/2"X14				33	8	27	27	
2NU4-12-16	Z3/4"X14	Z1"X11.5				37	11.5	33	41	
2NU4-16	Z1"X11.5	Z1"X11.5				37	11.5	33	41	
2NU4-16-12	Z1"X11.5	Z3/4"X14				37	11.5	33	32	
2NU4-20	Z1.1/4"X11.5	Z1.1/4"X11.5				40	12	44	50	
2NU4-24	Z1.1/2"X11.5	Z1.1/2"X11.5				47	13	50	55	
2NU4-32	Z2"X11.5	Z2"X11.5				55	16	65	70	

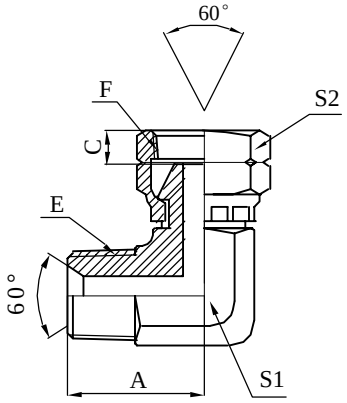

2NU9

90°布锥管外螺纹/美制NPSM内螺纹60°外锥
90°NPT MALE/NPSM FEMALE 60°CONE

代号 PART NO.	螺纹 THREADE					尺 寸 DIMENSIONS				
	E	F				A	C	S1	S2	
2NU9-02	Z1/8"X27	Z1/8"X27				21	5.5	11	14	
2NU9-02-04	Z1/8"X27	Z1/4"X18				21	5.5	11	19	
2NU9-04-02	Z1/4"X18	Z1/8"X27				29	5.5	14	14	
2NU9-04	Z1/4"X18	Z1/4"X18				29	5.5	14	19	
2NU9-04-06	Z1/4"X18	Z3/8"X18				30	6.5	17	22	
2NU9-06	Z3/8"X18	Z3/8"X18				30	6.5	17	22	
2NU9-06-04	Z3/8"X18	Z1/4"X18				30	5.5	17	19	
2NU9-06-08	Z3/8"X18	Z1/2"X14				33	8	19	27	
2NU9-08	Z1/2"X14	Z1/2"X14				37	8	22	27	
2NU9-08-06	Z1/2"X14	Z3/8"X18				37	6.5	22	22	
2NU9-08-12	Z1/2"X14	Z3/4"X14				43	11.5	27	32	
2NU9-12	Z3/4"X14	Z3/4"X14				43	11.5	27	32	
2NU9-12-08	Z3/4"X14	Z1/2"X14				43	8	27	27	
2NU9-12-16	Z3/4"X14	Z1"X11.5				52	11.5	33	41	
2NU9-16	Z1"X11.5	Z1"X11.5				52	11.5	33	41	
2NU9-16-12	Z1"X11.5	Z3/4"X14				52	11.5	33	32	
2NU9-20-16	Z1.1/4"X11.5	Z1"X11.5				59	11.5	44	41	
2NU9-20	Z1.1/4"X11.5	Z1.1/4"X11.5				59	12	44	50	
2NU9-24	Z1.1/2"X11.5	Z1.1/2"X11.5				61	13	50	55	
2NU9-32	Z2"X11.5	Z2"X11.5				66	16	65	70	

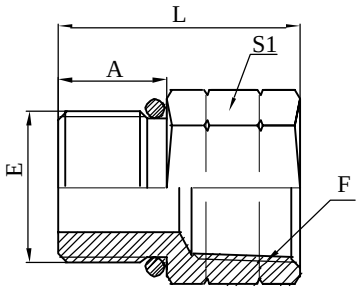

5GN

美制外螺纹O型圈/美制布锥管内螺纹
BSP MALE O-RING/NPT FEMALE

代号 PART NO.	螺纹 THREADE					尺 寸 DIMENSIONS				
	E	F				A		S1		L
5GN-02	G1/8"X28	Z1/8"X27				9		17		24
5GN-02-04	G1/8"X28	Z1/4"X18				9		19		27
5GN-04-02	G1/4"X19	Z1/8"X27				12		19		30
5GN-04	G1/4"X19	Z1/4"X18				12		19		30
5GN-04-06	G1/4"X19	Z3/8"X18				12		22		32
5GN-06-04	G3/8"X19	Z1/4"X18				13.5		22		33.5
5GN-06	G3/8"X19	Z3/8"X18				13.5		22		33.5
5GN-08-04	G1/2"X14	Z1/4"X18				16		27		36
5GN-08-06	G1/2"X14	Z3/8"X18				16		27		36
5GN-08	G1/2"X14	Z1/2"X14				16		30		42
5GN-12	G3/4"X14	Z3/4"X14				18.5		36		48.5
5GN-16	G1"X11	Z1"X11.5				20.5		41		54.5
5GN-20	G1.1/4"X11	Z1.1/4"X11.5				20.5		50		57.5
5GN-24	G1.1/2"X11	Z1.1/2"X11.5				23		60		60

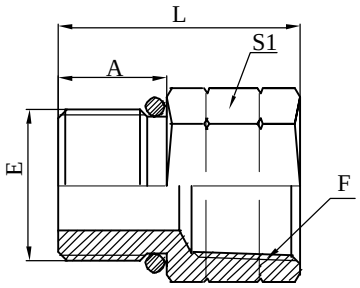

5HN

公制外螺纹轻系列/美制布锥管内螺纹
METRIC MALE L-SERIES/NPT FEMALE

代号 PART NO.	螺纹 THREADE					尺 寸 DIMENSIONS				
	E	F				A		S1		L
5HN-10-02	M10x1	Z1/8"X27				8.5		14		23
5HN-12-02	M12x1.5	Z1/8"X27				11		17		26
5HN-12-04	M12x1.5	Z1/4"X18				11		19		29
5HN-14-04	M14x1.5	Z1/4"X18				11		19		29
5HN-16-06	M16x1.5	Z3/8"X18				11		22		31
5HN-16-08	M16x1.5	Z1/2"X14				11		30		37
5HN-18-06	M18x1.5	Z3/8"X18				11		24		31
5HN-18-08	M18x1.5	Z1/2"X14				11		30		37
5HN-22-08	M22x1.5	Z1/2"X14				12		30		38
5HN-27-12	M27x2	Z3/4"X14				13		36		43

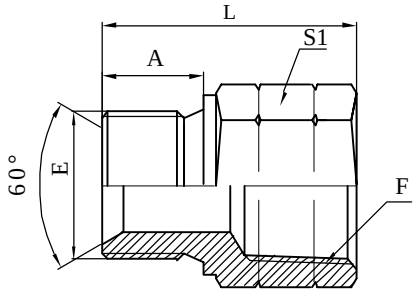

5MN

公制外螺纹组合垫圈/美制布锥管内螺纹
METRIC MALE WITH BONDED SEAL/NPT FEMALE

代号 PART NO.	螺纹 THREADE					尺 寸 DIMENSIONS				
	E	F				A		S1		L
5MN-12-02	M12x1.5	Z1/8"X27				10		19		30
5MN-14-04	M14x1.5	Z1/4"X18				11		19		31
5MN-16-06	M16x1.5	Z3/8"X18				12		22		34
5MN-18-06	M18x1.5	Z3/8"X18				12		24		34
5MN-22-06	M22x1.5	Z3/8"X18				14		27		36
5MN-22-08	M22x1.5	Z1/2"X14				14		30		43

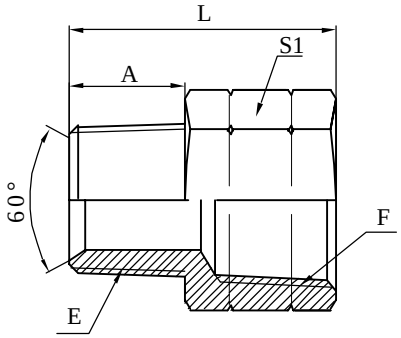

5NO

美制布锥管外螺纹/美制SAE内螺纹
NPT MALE/SAE FEMALE

代号 PART NO.	螺纹 THREADE					尺 寸 DIMENSIONS				
	E	F				A		S1		L
5NO-02-04	Z1/8"X27	U7/16"X20				10		17		25
5NO-02-05	Z1/8"X27	U1/2"X20				10		17		25
5NO-04	Z1/4"X18	U7/16"X20				14		17		29
5NO-04-06	Z1/4"X18	U9/16"X18				14		19		32
5NO-04-08	Z1/4"X18	U3/4"X16				14		27		34
5NO-06-04	Z3/8"X18	U7/16"X20				14		19		20
5NO-06	Z3/8"X18	U9/16"X18				14		19		32
5NO-06-08	Z3/8"X18	U3/4"X16				14		24		34
5NO-08-06	Z1/2"X14	U9/16"X18				19		24		27
5NO-08	Z1/2"X14	U3/4"X16				19		27		39
5NO-08-10	Z1/2"X14	U7/8"X14				19		30		45
5NO-12-08	Z3/4"X14	U3/4"X16				19.5		30		30
5NO-12-10	Z3/4"X14	U7/8"X14				19.5		30		30
5NO-12	Z3/4"X14	U1.1/16"X12				19.5		36		49
5NO-16-12	Z1"X11.5	U1.1/16"X12				24		36		35
5NO-16	Z1"X11.5	U1.5/16"X12				24		41		58
5NO-20	Z1.1/4"X11.5	U1.5/8"X12				25		50		62

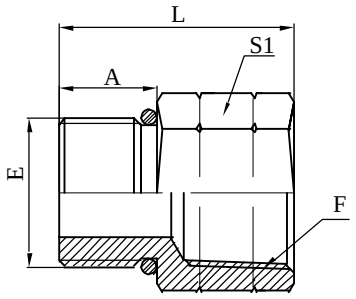

5ON

美制SAE外螺纹O型圈轻系列/
美制布锥管内螺纹
SAE O-RING BOSS L-SERIES/
NPT FEMALE

代号 PART NO.	螺纹 THREADE					尺 寸 DIMENSIONS				
	E	F				A		S1		L
5ON-04-02	U7/16"X20	Z1/8"X27				10		17		25
5ON-04	U7/16"X20	Z1/4"X18				10		19		28
5ON-04-06	U7/16"X20	Z3/8"X18				10		24		30
5ON-05-02	U1/2"X20	Z1/8"X27				10		17		25
5ON-06-04	U9/16"X18	Z1/4"X18				12		19		30
5ON-08-04	U3/4"X16	Z1/4"X18				12		22		32
5ON-08-06	U3/4"X16	Z3/8"X18				12		22		32
5ON-08	U3/4"X16	Z1/2"X14				12		30		38
5ON-08-12	U3/4"X16	Z3/4"X14				12		36		42
5ON-10-08	U7/8"X14	Z1/2"X14				13.5		30		39
5ON-10-06	U7/8"X14	Z3/8"X18				13.5		27		33
5ON-10-12	U7/8"X14	Z3/4"X14				13.5		36		43
5ON-12-08	U1.1/16"X12	Z1/2"X14				16		32		40
5ON-12	U1.1/16"X12	Z3/4"X14				16		36		46
5ON-12-16	U1.1/16"X12	Z1"X11.5				16		41		50
5ON-16-12	U1.5/16"X12	Z3/4"X14				17		41		51
5ON-16	U1.5/16"X12	Z1"X11.5				17		41		51
5ON-20-16	U1.5/8"X12	Z1"X11.5				18		50		54
5ON-20	U1.5/8"X12	Z1.1/4"X11.5				18		50		54
5ON-24-16	U1.7/8"X12	Z1"X11.5				18.5		55		56
5ON-24-20	U1.7/8"X12	Z1.1/4"X11.5				18.5		55		56
5ON-24	U1.7/8"X12	Z1.1/2"X11.5				18.5		60		56
5ON-32	U1.1/2"X12	Z2"X11.5				22		70		59

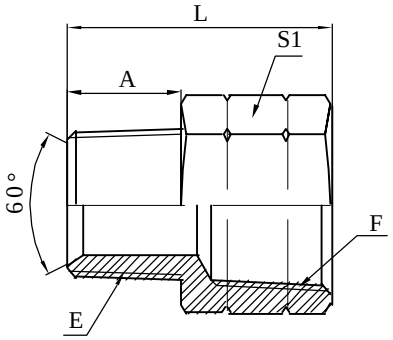

5TN

英锥管外螺纹/美制布锥管内螺纹
BSPT MALE/NPT FEMALE

代号 PART NO.	螺纹 THREADE					尺 寸 DIMENSIONS				
	E	F				A		S1		L
5TN-02	ZG1/8"X28	Z1/8"X27				10		17		25
5TN-04-02	ZG1/4"X19	Z1/8"X27				14		14		20
5TN-04	ZG1/4"X19	Z1/4"X18				14		19		32
5TN-06-04	ZG3/8"X19	Z1/4"X18				14		19		20
5TN-06	ZG3/8"X19	Z3/8"X18				14		24		34
5TN-08-06	ZG1/2"X14	Z3/8"X18				19		24		27
5TN-08	ZG1/2"X14	Z1/2"X14				19		30		45
5TN-12-08	ZG3/4"X14	Z1/2"X14				19.5		32		29
5TN-12	ZG3/4"X14	Z3/4"X14				19.5		36		49
5TN-16-12	ZG1"X11	Z3/4"X14				19.5		36		31
5TN-16	ZG1"X11	Z1"X11.5				24		41		58

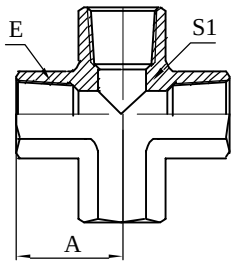

ZN

美制布锥管内螺纹四通
NPT FEMALE CROSS

代号 PART NO.	螺纹 THREADE					尺 寸 DIMENSIONS				
	E					A		S1		
ZN-04	Z1/4"X18					21		17		
ZN-06	Z3/8"X18					24		22		
ZN-08	Z1/2"X14					27		26		
ZN-12	Z3/4"X14					33		34		
ZN-16	Z1"X11.5					38		41		
ZN-20	Z1.1/4"X11.5					45		54		

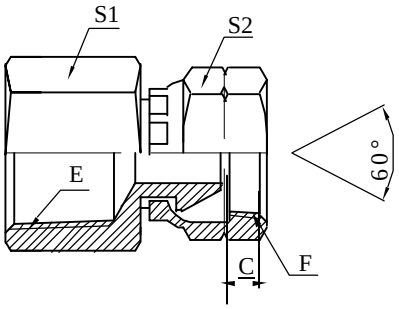

7NU

布锥管内螺纹/美制NPSM内螺纹60 °外锥
NPT FEMALE/NPSM FEMALE 60 °CONE

代号 PART NO.	螺纹 THREADE					尺 寸 DIMENSIONS				
	E	F				A	C	S1	S2	
7NU-02	Z1/8"X27	Z1/8"X27				10	5.5	17	14	
7NU-04-02	Z1/4"X18	Z1/8"X27				14	5.5	19	14	
7NU-04	Z1/4"X18	Z1/4"X18				14	5.5	19	19	
7NU-04-06	Z1/4"X18	Z3/8"X18				14	6.5	19	22	
7NU-06	Z3/8"X18	Z3/8"X18				14	6.5	22	22	
7NU-06-08	Z3/8"X18	Z1/2"X14				14	8	22	27	
7NU-08-06	Z1/2"X14	Z3/8"X18				19	6.5	30	22	
7NU-08	Z1/2"X14	Z1/2"X14				19	8	30	27	
7NU-12	Z3/4"X14	Z3/4"X14				19.5	11.5	36	32	
7NU-16	Z1"X11.5	Z1"X11.5				24	11.5	41	41	
7NU-20	Z1.1/4"X11.5	Z1.1/4"X11.5				25	12	50	50	
7NU-24	Z1.1/2"X11.5	Z1.1/2"X11.5				25	13	60	55	
7NU-32	Z2"X11.5	Z2"X11.5				29	16	70	70	

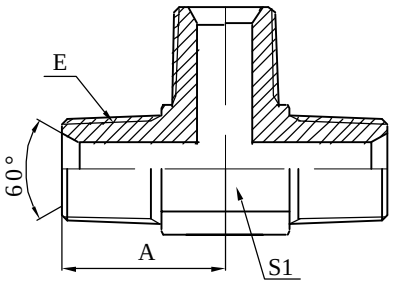

AN

美制布锥管外螺纹三通
NPT MALE TEE

代号 PART NO.	螺纹 THREADE					尺 寸 DIMENSIONS				
	E					A		S1		
AN-02	Z1/8"X27					24		11		
AN-04	Z1/4"X18					27		14		
AN-06	Z3/8"X18					28		17		
AN-08	Z1/2"X14					33		22		
AN-12	Z3/4"X14					40		27		
AN-16	Z1"X11.5					49		33		
AN-20	Z1.1/4"X11.5					57		44		

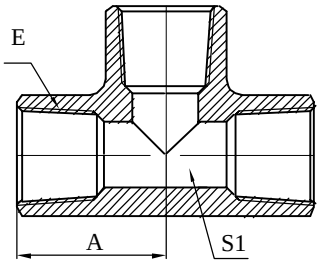

GN

布锥管内螺纹三通
NPT FEMALE TEE

代号 PART NO.	螺纹 THREADE					尺 寸 DIMENSIONS				
	E					A		S1		
GN-02	Z1/8"X27					17		14		
GN-04	Z1/4"X18					21		17		
GN-06	Z3/8"X18					24		22		
GN-08	Z1/2"X14					27		26		
GN-12	Z3/4"X14					33		34		
GN-16	Z1"X11.5					38		41		
GN-20	Z1.1/4"X11.5					45		54		
GN-24	Z1.1/2"X11.5					47		56		
GN-32	Z2"X11.5					60		68		

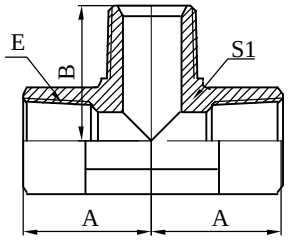

JN

美制布锥管内螺纹/布锥管外螺纹分支三通
NPT FEMALE/NPT MALE BRANCH TEE

代号 PART NO.	螺纹 THREADE					尺 寸 DIMENSIONS				
	E	F				A	B	S1		
JN-02	Z1/8"X27	Z1/8"X27				17	17	14		
JN-04	Z1/4"X18	Z1/4"X18				21	21	17		
JN-06	Z3/8"X18	Z3/8"X18				24	24	22		
JN-08	Z1/2"X14	Z1/2"X14				27	27	26		
JN-12	Z3/4"X14	Z3/4"X14				33	33	34		
JN-16	Z1"X11.5	Z1"X11.5				38	38	41		

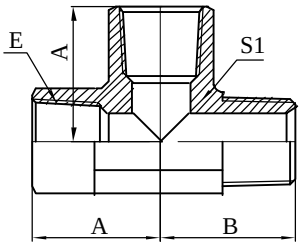

HN

美制布锥管内螺纹/布锥管外螺纹主支三通
NPT FEMALE/NPT MALE RUN TEE

代号 PART NO.	螺纹 THREADE					尺 寸 DIMENSIONS				
	E	F				A	B	S1		
HN-02	Z1/8"X27	Z1/8"X27				17	17	14		
HN-04	Z1/4"X18	Z1/4"X18				21	21	17		
HN-06	Z3/8"X18	Z3/8"X18				24	24	22		
HN-08	Z1/2"X14	Z1/2"X14				27	27	26		
HN-12	Z3/4"X14	Z3/4"X14				33	33	34		
HN-16	Z1"X11.5	Z1"X11.5				38	38	41		

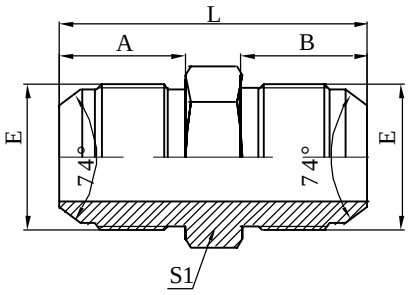

1J

美制JIC外螺纹74°外锥
JIC MALE 74° CONE

代号 PART NO.	螺纹 THREADE					尺 寸 DIMENSIONS				
	E	F				A	B	S1		L
1J-02	U5/16"X24	U5/16"X24				11.5	11.5	12		29
1J-04	U7/16"X20	U7/16"X20				14	14	14		34
1J-04-05	U7/16"X20	U1/2"X20				14	14	14		34
1J-04-06	U7/16"X20	U9/16"X18				14	14	17		34
1J-04-08	U7/16"X20	U3/4"X16				14	16.7	22		39
1J-05	U1/2"X20	U1/2"X20				14	14	14		34
1J-05-06	U1/2"X20	U9/16"X18				14	14	17		35
1J-05-08	U1/2"X20	U3/4"X16				14	16.7	22		39
1J-05-10	U1/2"X20	U7/8"X14				14	19.5	24		42
1J-06	U9/16"X18	U9/16"X18				14	14	17		35.5
1J-06-08	U9/16"X18	U3/4"X16				14	16.7	22		38
1J-06-10	U9/16"X18	U7/8"X14				14	19.5	24		42
1J-06-12	U9/16"X18	U1.1/16"X12				14	22	30		46
1J-08	U3/4"X16	U3/4"X16				16.7	16.7	22		42
1J-08-10	U3/4"X16	U7/8"X14				16.7	19.5	24		44
1J-08-12	U3/4"X16	U1.1/16"X12				16.7	22	30		49
1J-08-16	U3/4"X16	U1.5/16"X12				16.7	23	36		51
1J-10	U7/8"X14	U7/8"X14				19.5	19.5	24		47.5
1J-10-12	U7/8"X14	U1.1/16"X12				19.5	22	30		52
1J-10-16	U7/8"X14	U1.5/16"X12				19.5	23	36		53.5
1J-12	U1.1/16"X12	U1.1/16"X12				22	22	30		55
1J-12-16	U1.1/16"X12	U1.5/16"X12				22	23	36		56
1J-16	U1.5/16"X12	U1.5/16"X12				23	23	36		57
1J-16-20	U1.5/16"X12	U1.5/8"X12				23	24.5	46		60
1J-20	U1.5/8"X12	U1.5/8"X12				24.5	24.5	46		61.5
1J-20-24	U1.5/8"X12	U1.7/8"X12				24.5	27.5	50		66.5
1J-20-32	U1.5/8"X12	U2.1/2"X12				24.5	34	70		75.5
1J-24	U1.7/8"X12	U1.7/8"X12				27.5	27.5	50		69.5
1J-24-32	U1.7/8"X12	U2.1/2"X12				27.5	34	70		78.5
1J-32	U2.1/2"X12	U2.1/2"X12				34	34	70		85

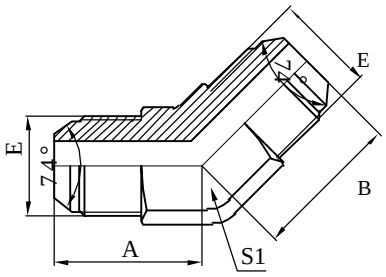

1J4

45°日制JIC外螺纹74°外锥
45°JIC MALE 74° CONE

代号 PART NO.	螺纹 THREADE					尺 寸 DIMENSIONS				
	E					A	B	S1		
1J4-04	U7/16"X20					20	20	11		
1J4-05	U1/2"X20					22	22	14		
1J4-06	U9/16"X18					22	22	14		
1J4-08	U3/4"X16					25	25	19		
1J4-10	U7/8"X14					27	27	22		
1J4-12	U1.1/16"X12					33	33	27		
1J4-16	U1.5/16"X12					37	37	33		
1J4-20	U1.5/8"X12					40	40	44		
1J4-24	U1.7/8"X12					47	47	53		
1J4-32	U2.1/2"X12					55	55	65		

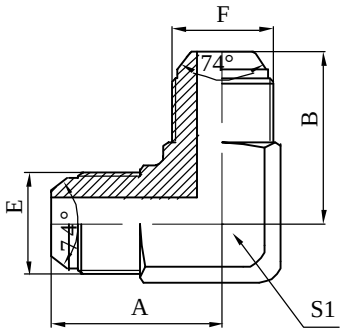

1J9

90°日制JIC外螺纹74°外锥
90°JIC MALE 74° CONE

代号 PART NO.	螺纹 THREADE					尺 寸 DIMENSIONS				
	E					A	B	S1		
1J9-04	U7/16"X20	U7/16"X20				22	22	11		
1J9-05	U1/2"X20	U1/2"X20				29	27	14		
1J9-06	U9/16"X18	U9/16"X18				29	27	14		
1J9-08	U3/4"X16	U3/4"X16				33	33	19		
1J9-10	U7/8"X14	U7/8"X14				37	37	22		
1J9-12	U1.1/16"X12	U1.1/16"X12				40	40	27		
1J9-16	U1.5/16"X12	U1.5/16"X12				49	49	33		
1J9-20	U1.5/8"X12	U1.5/8"X12				57	57	44		
1J9-24	U1.7/8"X12	U1.7/8"X12				57	57	48		
1J9-32	U2.1/2"X12	U2.1/2"X12				66	66	65		

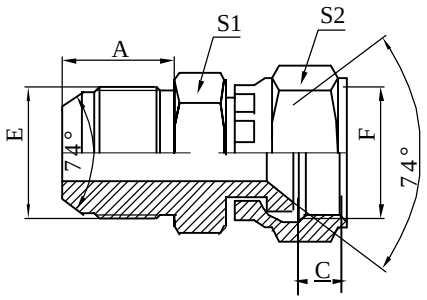

2J

美制JIC外螺纹74°外锥/
JIC内螺纹74°内锥
JIC MALE 74°CONE/
JIC FEMALE 74°SEAT

代号 PART NO.	螺纹 THREADE					尺 寸 DIMENSIONS				
	E	F				A	C	S1	S2	
2J-04	U7/16"X20	U7/16"X20				14	8.5	14	17	
2J-04-05	U7/16"X20	U1/2"X20				14	9.5	14	19	
2J-04-06	U7/16"X20	U9/16"X18				14	10	17	19	
2J-04-08	U7/16"X20	U3/4"X16				14	11	22	24	
2J-05	U1/2"X20	U1/2"X20				14	9.5	14	19	
2J-05-06	U1/2"X20	U9/16"X18				14	10	17	19	
2J-05-08	U1/2"X20	U3/4"X16				14	11	22	24	
2J-06	U9/16"X18	U9/16"X18				14	10	17	19	
2J-06-08	U9/16"X18	U3/4"X16				14	11	22	24	
2J-06-10	U9/16"X18	U7/8"X14				14	11	22	27	
2J-08	U3/4"X16	U3/4"X16				16.7	11	22	24	
2J-08-10	U3/4"X16	U7/8"X14				16.7	11	22	27	
2J-08-12	U3/4"X16	U1.1/16"X12				16.7	13.5	30	32	
2J-10	U7/8"X14	U7/8"X14				19.5	11	22	27	
2J-10-08	U7/8"X14	U3/4"X16				19.5	11	22	24	
2J-10-12	U7/8"X14	U1.1/16"X12				19.5	13.5	30	32	
2J-12	U1.1/16"X12	U1.1/16"X12				22	13.5	30	32	
2J-12-10	U1.1/16"X12	U7/8"X14				22	11	30	27	
2J-12-16	U1.1/16"X12	U1.5/16"X12				22	14.5	36	41	
2J-16	U1.5/16"X12	U1.5/16"X12				23	14.5	36	41	
2J-16-20	U1.5/16"X12	U1.5/8"X12				23	15.5	41	50	
2J-20	U1.5/8"X12	U1.5/8"X12				24.5	15.5	46	50	
2J-20-24	U1.5/8"X12	U1.7/8"X12				24.5	18.5	46	55	
2J-24	U1.7/8"X12	U1.7/8"X12				27.5	18.5	50	55	
2J-24-32	U1.7/8"X12	U2.1/2"X12				27.5	24.5	65	75	
2J-32	U2.1/2"X12	U2.1/2"X12				34	24.5	65	75	

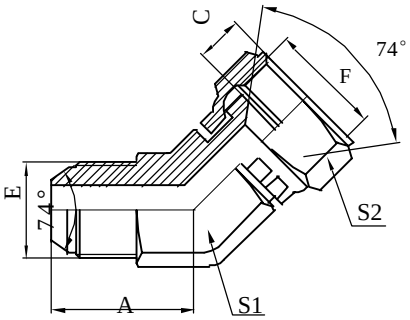

2J4

45°美制JIC外螺纹74°内锥/
JIC内螺纹74°内锥
45°JIC MALE 74°CONE/
JIC FEMALE 74°SEAT

代号 PART NO.	螺纹 THREADE					尺 寸 DIMENSIONS				
	E	F				A	C	S1	S2	
2J4-04	U7/16"X20	U7/16"X20				20	8.5	11	17	
2J4-05	U1/2"X20	U1/2"X20				22	9.5	14	19	
2J4-06	U9/16"X18	U9/16"X18				22	10	14	19	
2J4-08	U3/4"X16	U3/4"X16				25	11	19	24	
2J4-10	U7/8"X14	U7/8"X14				27	11	22	27	
2J4-12	U1.1/16"X12	U1.1/16"X12				33	13.5	27	32	
2J4-16	U1.5/16"X12	U1.5/16"X12				37	14.5	33	41	
2J4-20	U1.5/8"X12	U1.5/8"X12				40	15.5	44	50	
2J4-24	U1.7/8"X12	U1.7/8"X12				47	18.5	53	55	
2J4-32	U2.1/2"X12	U2.1/2"X12				55	24.5	65	75	

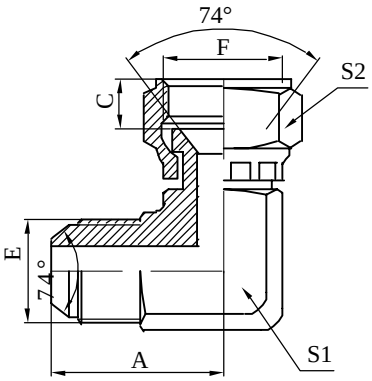

2J9

90°美制JIC外螺纹74°外锥/
JIC内螺纹74°内锥
90°JIC MALE 74°CONE/
JIC FEMALE 74°SEAT

代号 PART NO.	螺纹 THREADE					尺 寸 DIMENSIONS				
	E	F				A	C	S1	S2	
2J9-04	U7/16"X20	U7/16"X20				22	8.5	11	17	
2J9-05	U1/2"X20	U1/2"X20				29	9.5	14	19	
2J9-06	U9/16"X18	U9/16"X18				29	10	14	19	
2J9-06-08	U9/16"X18	U3/4"X16				33	11	19	24	
2J9-08-06	U3/4"X16	U9/16"X18				33	10	19	19	
2J9-08	U3/4"X16	U3/4"X16				33	11	19	24	
2J9-08-10	U3/4"X16	U7/8"X14				37	11	22	27	
2J9-10	U7/8"X14	U7/8"X14				37	11	22	27	
2J9-10-08	U7/8"X14	U3/4"X16				37	11	22	24	
2J9-10-12	U7/8"X14	U1.1/16"X12				40	13.5	27	32	
2J4-12	U1.1/16"X12	U1.1/16"X12				40	13.5	27	32	
2J4-12-10	U1.1/16"X12	U7/8"X14				40	11	27	27	
2J4-12-16	U1.1/16"X12	U1.5/16"X12				49	14.5	33	41	
2J9-16	U1.5/16"X12	U1.5/16"X12				49	14.5	33	41	
2J9-16-20	U1.5/16"X12	U1.5/8"X12				57	15.5	44	50	
2J9-20-16	U1.5/8"X12	U1.5/16"X12				57	14.5	44	41	
2J9-20	U1.5/8"X12	U1.5/8"X12				57	15.5	44	50	
2J9-20-24	U1.5/8"X12	U1.7/8"X12				57	18.5	48	55	
2J9-24-20	U1.7/8"X12	U1.5/8"X12				57	15.5	48	50	
2J9-24	U1.7/8"X12	U1.7/8"X12				57	18.5	48	55	
2J9-32	U2.1/2"X12	U2.1/2"X12				66	24.5	65	75	

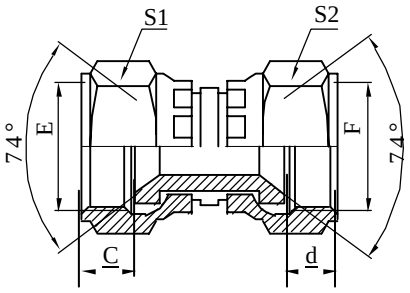

3J

美制JIC内螺纹74°内锥
JIC FEMALE 74°SEAT

代号 PART NO.	螺纹 THREADE					尺 寸 DIMENSIONS				
	E	F				C	d	S1	S2	
3J-04	U7/16"X20	U7/16"X20				8.5	8.5	17	17	
3J-05	U1/2"X20	U1/2"X20				9.5	9.5	19	19	
3J-06	U9/16"X18	U9/16"X18				10	10	19	19	
3J-06-08	U9/16"X18	U3/4"X16				10	11	19	24	
3J-08	U3/4"X16	U3/4"X16				11	11	24	24	
3J-10	U7/8"X14	U7/8"X14				11	11	27	27	
3J-12	U1.1/16"X12	U1.1/16"X12				13.5	13.5	32	32	
3J-16	U1.5/16"X12	U1.5/16"X12				14.5	14.5	41	41	
3J-20	U1.5/8"X12	U1.5/8"X12				15.5	15.5	50	50	
3J-24	U1.7/8"X12	U1.7/8"X12				18.5	18.5	55	55	

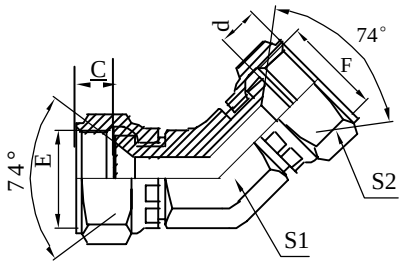

3J4

45°美制JIC内螺纹74°内锥
45°JIC FEMALE 74°SEAT

代号 PART NO.	螺纹 THREADE					尺 寸 DIMENSIONS				
	E	F				C	d	S1	S2	
3J4-04	U7/16"X20	U7/16"X20				8.5	8.5	17	17	
3J4-05	U1/2"X20	U1/2"X20				9.5	9.5	19	19	
3J4-06	U9/16"X18	U9/16"X18				10	10	19	19	
3J4-06-08	U9/16"X18	U3/4"X16				10	11	19	24	
3J4-08	U3/4"X16	U3/4"X16				11	11	24	24	
3J4-10	U7/8"X14	U7/8"X14				11	11	27	27	
3J4-12	U1.1/16"X12	U1.1/16"X12				13.5	13.5	32	32	
3J4-16	U1.5/16"X12	U1.5/16"X12				14.5	14.5	41	41	
3J4-20	U1.5/8"X12	U1.5/8"X12				15.5	15.5	50	50	
3J4-24	U1.7/8"X12	U1.7/8"X12				18.5	18.5	55	55	

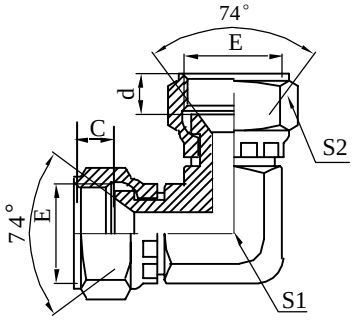

3J9

90°美制JIC内螺纹74°内锥
90°JIC FEMALE 74°SEAT

代号 PART NO.	螺纹 THREADE					尺 寸 DIMENSIONS				
	E	F				C	d	S1	S2	
3J9-04	U7/16"X20	U7/16"X20				8.5	8.5	17	17	
3J9-05	U1/2"X20	U1/2"X20				9.5	9.5	19	19	
3J9-06	U9/16"X18	U9/16"X18				10	10	19	19	
3J9-06-08	U9/16"X18	U3/4"X16				10	11	19	24	
3J9-08	U3/4"X16	U3/4"X16				11	11	24	24	
3J9-10	U7/8"X14	U7/8"X14				11	11	27	27	
3J9-12	U1.1/16"X12	U1.1/16"X12				13.5	13.5	32	32	
3J9-16	U1.5/16"X12	U1.5/16"X12				14.5	14.5	41	41	
3J9-20	U1.5/8"X12	U1.5/8"X12				15.5	15.5	50	50	
3J9-24	U1.7/8"X12	U1.7/8"X12				18.5	18.5	55	55	

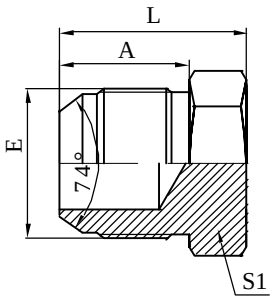

4J

美制JIC外螺纹74°外锥堵头
JIC MALE 74°CONE PLUG

代号 PART NO.	螺纹 THREADE					尺 寸 DIMENSIONS				
	E					A		S1		L
4J-04	U7/16"X20					14		14		20
4J-05	U1/2"X20					14		14		20
4J-06	U9/16"X18					14		17		20
4J-08	U3/4"X16					16.7		22		25
4J-10	U7/8"X14					19.5		24		28
4J-12	U1.1/16"X12					22		30		31
4J-16	U1.5/16"X12					23		36		34
4J-20	U1.5/8"X12					24.5		46		38
4J-24	U1.7/8"X12					27.5		50		44
4J-32	U2.1/2"X12					34		65		52

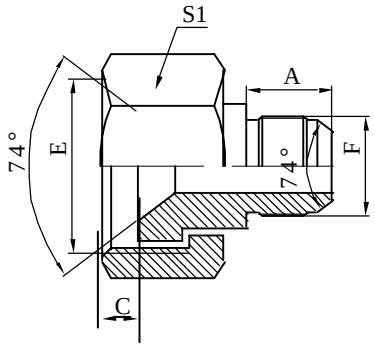

5J

美制JIC外螺纹/美制JIC内螺纹
JIC MALE/JIC FEMALE

代号 PART NO.	螺纹 THREADE					尺 寸 DIMENSIONS				
	E	F				A	C	S1		
5J-06-04	U9/16"X18	U7/16"X20				14	10	19		
5J-08-04	U3/4"X16	U7/16"X20				14	11	24		
5J-10-04	U7/8"X14	U7/16"X20				14	12	27		
5J-12-04	U1.1/16"X12	U7/16"X20				14	13	32		
5J-08-05	U3/4"X16	U1/2"X20				14	11	24		
5J-10-05	U7/8"X14	U1/2"X20				14	12	27		
5J-12-05	U1.1/16"X12	U1/2"X20				14	13	32		
5J-08-06	U3/4"X16	U9/16"X18				14	11	24		
5J-10-06	U7/8"X14	U9/16"X18				14	12	27		
5J-12-06	U1.1/16"X12	U9/16"X18				14	13	32		
5J-16-06	U1.5/16"X12	U9/16"X18				14	14	38		
5J-12-08	U1.1/16"X12	U3/4"X16				16.7	13	32		
5J-16-08	U1.5/16"X12	U3/4"X16				16.7	14	38		
5J-20-08	U1.5/8"X12	U3/4"X16				16.7	15	50		
5J-16-10	U1.5/16"X12	U7/8"X14				19.5	14	38		
5J-20-10	U1.5/8"X12	U7/8"X14				19.5	15	50		
5J-24-10	U1.7/8"X12	U7/8"X14				19.5	19	55		
5J-16-12	U1.5/16"X12	U1.1/16"X12				22	14	38		
5J-20-12	U1.5/8"X12	U1.1/16"X12				22	15	50		
5J-24-12	U1.7/8"X12	U1.1/16"X12				22	19	55		
5J-20-16	U1.5/8"X12	U1.5/16"X12				23	15	50		
5J-24-16	U1.7/8"X12	U1.5/16"X12				23	19	55		
5J-24-20	U1.7/8"X12	U1.5/8"X12				24.5	19	55		

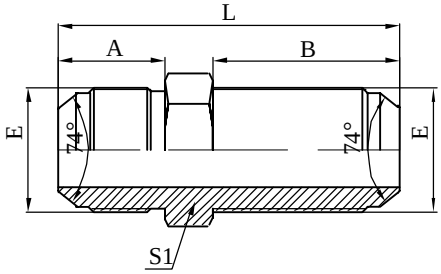

6J

美制JIC外螺纹74°外锥过板接头
JIC MALE 74°CONE BULKHEAD

代号 PART NO.	螺纹 THREADE					尺 寸 DIMENSIONS				
	E					A	B	S1	L	
6J-04	U7/16"X20					14	32.5	17	53	
6J-06	U9/16"X18					14	32.5	22	54	
6J-08	U3/4"X16					16.7	36.5	24	61.5	
6J-10	U7/8"X14					19.5	40	30	69.5	
6J-12	U1.1/16"X12					22	44.5	36	78	
6J-16	U1.5/16"X12					23	44.5	41	80	
6J-20	U1.5/8"X12					24.5	45.7	50	84	
6J-24	U1.7/8"X12					27.5	46	55	89	
6J-32	U2.1/2"X12					34	53.1	70	105	

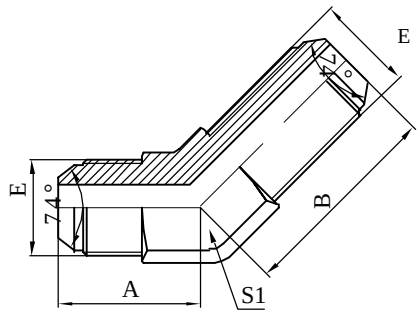

6J4

45°美制JIC外螺纹74°外锥过板接头
45°JIC MALE 74°CONE BULKHEAD

代号 PART NO.	螺纹 THREADE					尺 寸 DIMENSIONS				
	E					A	B	S1		
6J4-04	U7/16"X20					22	39	14		
6J4-06	U9/16"X18					22	42.5	14		
6J4-08	U3/4"X16					25	49.3	19		
6J4-10	U7/8"X14					27	55	22		
6J4-12	U1.1/16"X12					33	62	27		
6J4-16	U1.5/16"X12					37	65	33		
6J4-20	U1.5/8"X12					40	67.3	44		

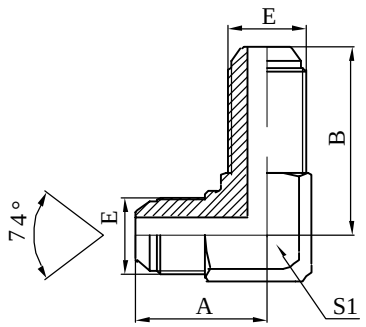

6J9

90°美制JIC外螺纹74°外锥过板接头
90°JIC MALE 74°CONE BULKHEAD

代号 PART NO.	螺纹 THREADE					尺 寸 DIMENSIONS				
	E					A	B	S1		
6J9-04	U7/16"X20					29	40.4	14		
6J9-06	U9/16"X18					29	46	14		
6J9-08	U3/4"X16					33	53.5	19		
6J9-10	U7/8"X14					37	60.7	22		
6J9-12	U1.1/16"X12					40	67.8	27		
6J9-16	U1.5/16"X12					49	71	33		
6J9-20	U1.5/8"X12					57	79.2	44		

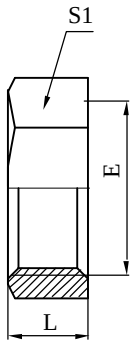

8J

美制JIC锁母
JIC LOCK NUT

代号 PART NO.	螺纹 THREADE					尺 寸 DIMENSIONS				
	E					L		S1		
8J-04	U7/16"X20					7		17		
8J-06	U9/16"X18					7		19		
8J-08	U3/4"X16					8		24		
8J-10	U7/8"X14					9		30		
8J-12	U1.1/16"X12					10.5		36		
8J-16	U1.5/16"X12					10.5		41		
8J-20	U1.5/8"X12					10.5		50		
8J-24	U1.7/8"X12					10.5		55		
8J-32	U2.1/2"X12					10.5		70		

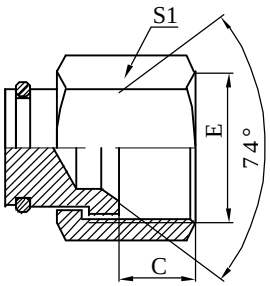

9J

美制JIC内螺纹74°内锥堵头
JIC FEMALE 74°SEAT PLUG

代号 PART NO.	螺纹 THREADE					尺 寸 DIMENSIONS				
	E	F				C		S1		
9J-04	U7/16"X20	U7/16"X20				9		17		
9J-06	U9/16"X18	U9/16"X18				10		19		
9J-08	U3/4"X16	U3/4"X16				11		24		
9J-10	U7/8"X14	U7/8"X14				12		27		
9J-12	U1.1/16"X12	U1.1/16"X12				13		32		
9J-16	U1.5/16"X12	U1.5/16"X12				14		38		
9J-20	U1.5/8"X12	U1.5/8"X12				15		50		
9J-24	U1.7/8"X12	U1.7/8"X12				19		55		
9J-32	U2.1/2"X12	U2.1/2"X12				24		75		

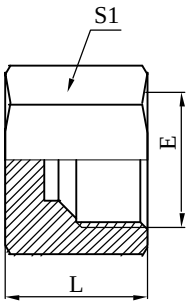

9J-CAP

JIC74°内螺纹堵头
JIC 74°FEMALE PLUG

代号 PART NO.	螺纹 THREADE					尺 寸 DIMENSIONS				
	E							S1		L
9J-04CAP	U7/16"X20							14		15
9J-06CAP	U9/16"X18							17		16
9J-08CAP	U3/4"X16							22		19
9J-10CAP	U7/8"X14							27		21.5
9J-12CAP	U1.1/16"X12							32		23
9J-16CAP	U1.5/16"X12							38		26

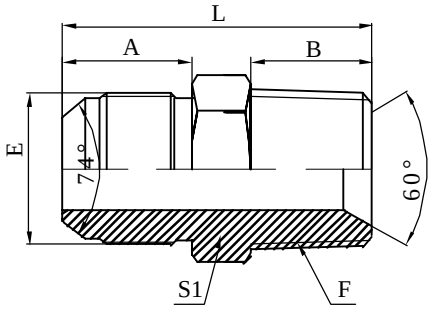

1JT

JIC外螺纹74°外锥/英锥管外螺纹
JIC MALE 74°CONE/BSPT MALE

代号 PART NO.	螺纹 THREADE					尺 寸 DIMENSIONS				
	E	F				A	B	S1	L	
1JT-04-02	U7/16"X20	ZG1/8"X28				14	10	14	30	
1JT-04	U7/16"X20	ZG1/4"X19				14	14	14	34	
1JT-04-06	U7/16"X20	ZG3/8"X19				14	14	19	34	
1JT-04-08	U7/16"X20	ZG1/2"X14				14	19	22	41.5	
1JT-05-04	U1/2"X20	ZG1/4"X19				14	14	14	34	
1JT-05-06	U1/2"X20	ZG3/8"X19				14	14	19	34	
1JT-05-08	U1/2"X20	ZG1/2"X14				14	19	22	41.5	
1JT-06-04	U9/16"X18	ZG1/4"X19				14	14	17	34	
1JT-06	U9/16"X18	ZG3/8"X19				14	14	19	34	
1JT-06-08	U9/16"X18	ZG1/2"X14				14	19	22	41	
1JT-08-04	U3/4"X16	ZG1/4"X19				16.7	14	22	39	
1JT-08-06	U3/4"X16	ZG3/8"X19				16.7	14	22	38	
1JT-08	U3/4"X16	ZG1/2"X14				16.7	19	22	44	
1JT-08-12	U3/4"X16	ZG3/4"X14				16.7	19.5	30	46	
1JT-10-06	U7/8"X14	ZG3/8"X19				19.5	14	24	42	
1JT-10-08	U7/8"X14	ZG1/2"X14				19.5	19	24	47	
1JT-10-12	U7/8"X14	ZG3/4"X14				19.5	19.5	30	48	
1JT-12-08	U1.1/16"X12	ZG1/2"X14				22	19	30	50	
1JT-12	U1.1/16"X12	ZG3/4"X14				22	19.5	30	50	
1JT-12-16	U1.1/16"X12	ZG1"X11				22	24	36	57	
1JT-12-20	U1.1/16"X12	ZG1.1/4"X11				22	25	46	60	
1JT-16-12	U1.5/16"X12	ZG3/4"X14				23	19.5	36	53	
1JT-16	U1.5/16"X12	ZG1"X11				23	24	36	58	
1JT-16-20	U1.5/16"X12	ZG1.1/4"X11				23	25	46	61	
1JT-16-24	U1.5/16"X12	ZG1.1/2"X11				23	25	50	64	
1JT-20-16	U1.5/8"X12	ZG1"X11				24.5	24	46	62	
1JT-20	U1.5/8"X12	ZG1.1/4"X11				24.5	25	46	63	
1JT-24	U1.7/8"X12	ZG1.1/2"X11				27.5	25	50	69	
1JT-24-32	U1.7/8"X12	ZG2"X11				27.5	29	70	74	
1JT-32	U2.1/2"X12	ZG2"X11				34	29	70	81	

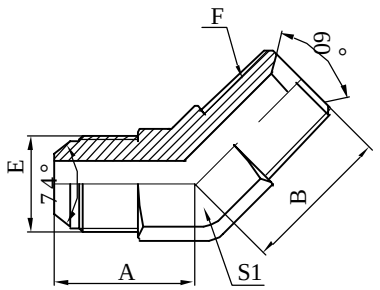

1JT4

45°JIC外螺纹74°外锥/英锥管外螺纹
45°JIC MALE 74°CONE/BSPT MALE

代号 PART NO.	螺纹 THREADE					尺 寸 DIMENSIONS				
	E	F				A	B	S1		
1JT4-04-02	U7/16"X20	ZG1/8"X28				20	20	11		
1JT4-04	U7/16"X20	ZG1/4"X19				22	22	14		
1JT4-04-06	U7/16"X20	ZG3/8"X19				22	22	17		
1JT4-04-08	U7/16"X20	ZG1/2"X14				27	27	22		
1JT4-05-04	U1/2"X20	ZG1/4"X19				22	22	14		
1JT4-06-04	U9/16"X18	ZG1/4"X19				22	22	14		
1JT4-06	U9/16"X18	ZG3/8"X19				22	22	17		
1JT4-06-08	U9/16"X18	ZG1/2"X14				27	27	22		
1JT4-08-04	U3/4"X16	ZG1/4"X19				25	25	19		
1JT4-08-06	U3/4"X16	ZG3/8"X19				25	25	19		
1JT4-08	U3/4"X16	ZG1/2"X14				27	27	22		
1JT4-08-12	U3/4"X16	ZG3/4"X14				33	33	27		
1JT4-10-08	U7/8"X14	ZG1/2"X14				27	27	22		
1JT4-10-12	U7/8"X14	ZG3/4"X14				33	33	27		
1JT4-12-08	U1.1/16"X12	ZG1/2"X14				33	33	27		
1JT4-12	U1.1/16"X12	ZG3/4"X14				33	33	27		
1JT4-12-16	U1.1/16"X12	ZG1"X11				37	37	33		
1JT4-16-12	U1.5/16"X12	ZG3/4"X14				37	37	33		
1JT4-16	U1.5/16"X12	ZG1"X11				37	37	33		
1JT4-16-20	U1.5/16"X12	ZG1.1/4"X11				40	40	44		
1JT4-20-16	U1.5/8"X12	ZG1"X11				40	40	44		
1JT4-20	U1.5/8"X12	ZG1.1/4"X11				40	40	44		
1JT4-20-24	U1.7/8"X12	ZG1.1/2"X11				47	47	53		
1JT4-24	U1.7/8"X12	ZG1.1/2"X11				47	47	53		
1JT4-32	U2.1/2"X12	ZG2"X11				55	55	65		

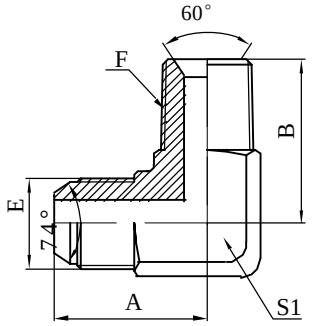

1JT9

90°JIC外螺纹74°外锥/英锥管外螺纹
90°JIC MALE 74°CONE/BSPT MALE

代号 PART NO.	螺纹 THREADE					尺 寸 DIMENSIONS				
	E	F				A	B	S1		
1JT9-04-02	U7/16"X20	ZG1/8"X28				22	22	11		
1JT9-04	U7/16"X20	ZG1/4"X19				29	27	14		
1JT9-04-06	U7/16"X20	ZG3/8"X19				29	30	17		
1JT9-05-02	U1/2"X20	ZG1/8"X28				29	27	14		
1JT9-05-04	U1/2"X20	ZG1/4"X19				29	27	14		
1JT9-05-06	U1/2"X20	ZG3/8"X19				29	30	17		
1JT9-06	U9/16"X18	ZG3/8"X19				22	22	17		
1JT9-06-04	U9/16"X18	ZG1/4"X19				29	27	14		
1JT9-06-08	U9/16"X18	ZG1/2"X14				37	37	22		
1JT9-08-04	U3/4"X16	ZG1/4"X19				33	33	19		
1JT9-08-06	U3/4"X16	ZG3/8"X19				33	33	19		
1JT9-08	U3/4"X16	ZG1/2"X14				37	37	22		
1JT9-08-12	U3/4"X16	ZG3/4"X14				40	40	27		
1JT9-10-06	U7/8"X14	ZG3/8"X19				37	37	22		
1JT9-10-08	U7/8"X14	ZG1/2"X14				37	37	22		
1JT9-10-12	U7/8"X14	ZG3/4"X14				40	40	27		
1JT9-12-08	U1.1/16"X12	ZG1/2"X14				40	40	27		
1JT9-12	U1.1/16"X12	ZG3/4"X14				40	40	27		
1JT9-12-16	U1.1/16"X12	ZG1"X11				49	49	33		
1JT9-16-12	U1.5/16"X12	ZG3/4"X14				49	49	33		
1JT9-16	U1.5/16"X12	ZG1"X11				49	49	33		
1JT9-16-20	U1.5/16"X12	ZG1.1/4"X11				57	57	44		
1JT9-16-24	U1.5/16"X12	ZG1.1/2"X11				57	57	48		
1JT9-20-16	U1.5/8"X12	ZG1"X11				57	57	44		
1JT9-20	U1.5/8"X12	ZG1.1/4"X11				57	57	44		
1JT9-20-24	U1.7/8"X12	ZG1.1/2"X11				57	57	48		
1JT9-24	U1.7/8"X12	ZG1.1/2"X11				57	57	48		
1JT9-24-20	U1.7/8"X12	ZG1.1/4"X11				57	57	48		
1JT9-32-24	U2.1/2"X12	ZG1.1/2"X11				66	66	65		
1JT9-32	U2.1/2"X12	ZG2"X11				66	66	65		

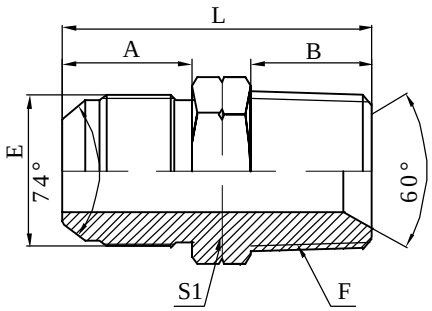

1JN

JIC外螺纹74°外锥/布锥管外螺纹
JIC MALE 74°CONE/NPT MALE

代号 PART NO.	螺纹 THREADE					尺 寸 DIMENSIONS				
	E	F				A	B	S1	L	
1JN-04-02	U7/16"X20	Z1/8"X27				14	10	14	30	
1JN-04	U7/16"X20	Z1/4"X18				14	14	14	34	
1JN-04-06	U7/16"X20	Z3/8"X18				14	14	19	34	
1JN-04-08	U7/16"X20	Z1/2"X14				14	19	22	41.5	
1JN-05-04	U1/2"X20	Z1/4"X18				14	14	14	34	
1JN-05-06	U1/2"X20	Z3/8"X18				14	14	19	34	
1JN-05-08	U1/2"X20	Z1/2"X14				14	19	22	41.5	
1JN-06-04	U9/16"X18	Z1/4"X18				14	14	17	34	
1JN-06	U9/16"X18	Z3/8"X18				14	14	19	34	
1JN-06-08	U9/16"X18	Z1/2"X14				14	19	22	41	
1JN-08-04	U3/4"X16	Z1/4"X18				16.7	14	22	39	
1JN-08-06	U3/4"X16	Z3/8"X18				16.7	14	22	38	
1JN-08	U3/4"X16	Z1/2"X14				16.7	19	22	44	
1JN-08-12	U3/4"X16	Z3/4"X14				16.7	19.5	30	46	
1JN-10-06	U7/8"X14	Z3/8"X18				19.5	14	24	42	
1JN-10-08	U7/8"X14	Z1/2"X14				19.5	19	24	47	
1JN-10-12	U7/8"X14	Z3/4"X14				19.5	19.5	30	48	
1JN-12-08	U1.1/16"X12	Z1/2"X14				22	19	30	50	
1JN-12	U1.1/16"X12	Z3/4"X14				22	19.5	30	50	
1JN-12-16	U1.1/16"X12	Z1"X11.5				22	24	36	57	
1JN-12-20	U1.1/16"X12	Z1.1/4"X11.5				22	25	46	60	
1JN-16-12	U1.5/16"X12	Z3/4"X14				23	19.5	36	53	
1JN-16	U1.5/16"X12	Z1"X11.5				23	24	36	58	
1JN-16-20	U1.5/16"X12	Z1.1/4"X11.5				23	25	46	61	
1JN-16-24	U1.5/16"X12	Z1.1/2"X11.5				23	25	50	64	
1JN-20-16	U1.5/8"X12	Z1"X11.5				24.5	24	46	62	
1JN-20	U1.5/8"X12	Z1.1/4"X11.5				24.5	25	46	63	
1JN-24	U1.7/8"X12	Z1.1/2"X11.5				27.5	25	50	69	
1JN-24-32	U1.7/8"X12	Z2"X11.5				27.5	29	70	74	
1JN-32	U2.1/2"X12	Z2"X11.5				34	29	70	81	

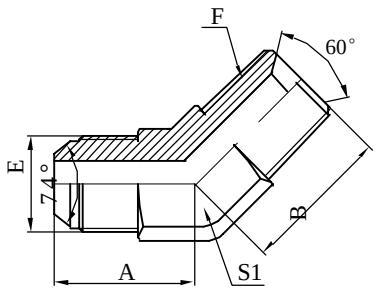

1JN4

45°JIC外螺纹74°外锥/布锥管外螺纹
45°JIC MALE 74°CONE/NPT MALE

代号 PART NO.	螺纹 THREADE					尺 寸 DIMENSIONS				
	E	F				A	B	S1		
1JN4-04-02	U7/16"X20	Z1/8"X27				20	20	11		
1JN4-04	U7/16"X20	Z1/4"X18				22	22	14		
1JN4-04-06	U7/16"X20	Z3/8"X18				22	22	17		
1JN4-04-08	U7/16"X20	Z1/2"X14				27	27	22		
1JN4-05-04	U1/2"X20	Z1/4"X18				22	22	14		
1JN4-06-04	U9/16"X18	Z1/4"X18				22	22	14		
1JN4-06	U9/16"X18	Z3/8"X18				22	22	17		
1JN4-06-08	U9/16"X18	Z1/2"X14				27	27	22		
1JN4-08-04	U3/4"X16	Z1/4"X18				25	25	19		
1JN4-08-06	U3/4"X16	Z3/8"X18				25	25	19		
1JN4-08	U3/4"X16	Z1/2"X14				27	27	22		
1JN4-08-12	U3/4"X16	Z3/4"X14				33	33	27		
1JN4-10-08	U7/8"X14	Z1/2"X14				27	27	22		
1JN4-10-12	U7/8"X14	Z3/4"X14				33	33	27		
1JN4-12-08	U1.1/16"X12	Z1/2"X14				33	33	27		
1JN4-12	U1.1/16"X12	Z3/4"X14				33	33	27		
1JN4-12-16	U1.1/16"X12	Z1"X11.5				37	37	33		
1JN4-16-12	U1.5/16"X12	Z3/4"X14				37	37	33		
1JN4-16	U1.5/16"X12	Z1"X11.5				37	37	33		
1JN4-16-20	U1.5/16"X12	Z1.1/4"X11.5				40	40	44		
1JN4-20-16	U1.5/8"X12	Z1"X11.5				40	40	44		
1JN4-20	U1.5/8"X12	Z1.1/4"X11.5				40	40	44		
1JN4-20-24	U1.7/8"X12	Z1.1/2"X11.5				47	47	53		
1JN4-24	U1.7/8"X12	Z1.1/2"X11.5				47	47	53		
1JN4-32	U2.1/2"X12	Z2"X11.5				55	55	65		

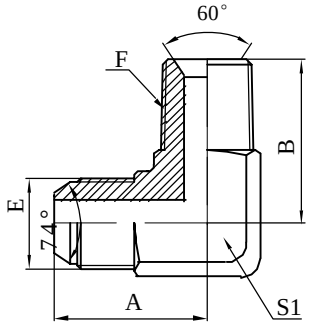

1JN9

90°JIC外螺纹74°外锥/布锥管外螺纹
90°JIC MALE 74°CONE/NPT MALE

代号 PART NO.	螺纹 THREADE					尺 寸 DIMENSIONS				
	E	F				A	B	S1		
1JN9-04-02	U7/16"X20	Z1/8"X27				22	22	11		
1JN9-04	U7/16"X20	Z1/4"X18				29	27	14		
1JN9-04-06	U7/16"X20	Z3/8"X18				29	30	17		
1JN9-05-02	U1/2"X20	Z1/8"X27				29	27	14		
1JN9-05-04	U1/2"X20	Z1/4"X18				29	27	14		
1JN9-05-06	U1/2"X20	Z3/8"X18				29	30	17		
1JN9-06	U9/16"X18	Z3/8"X18				22	22	17		
1JN9-06-04	U9/16"X18	Z1/4"X18				29	27	14		
1JN9-06-08	U9/16"X18	Z1/2"X14				37	37	22		
1JN9-08-04	U3/4"X16	Z1/4"X18				33	33	19		
1JN9-08-06	U3/4"X16	Z3/8"X18				33	33	19		
1JN9-08	U3/4"X16	Z1/2"X14				37	37	22		
1JN9-08-12	U3/4"X16	Z3/4"X14				40	40	27		
1JN9-10-06	U7/8"X14	Z3/8"X18				37	37	22		
1JN9-10-08	U7/8"X14	Z1/2"X14				37	37	22		
1JN9-10-12	U7/8"X14	Z3/4"X14				40	40	27		
1JN9-12-08	U1.1/16"X12	Z1/2"X14				40	40	27		
1JN9-12	U1.1/16"X12	Z3/4"X14				40	40	27		
1JN9-12-16	U1.1/16"X12	Z1"X11.5				49	49	33		
1JN9-16-12	U1.5/16"X12	Z3/4"X14				49	49	33		
1JN9-16	U1.5/16"X12	Z1"X11.5				49	49	33		
1JN9-16-20	U1.5/16"X12	Z1.1/4"X11.5				57	57	44		
1JN9-16-24	U1.5/16"X12	Z1.1/2"X11.5				57	57	48		
1JN9-20-16	U1.5/8"X12	Z1"X11.5				57	57	44		
1JN9-20	U1.5/8"X12	Z1.1/4"X11.5				57	57	44		
1JN9-20-24	U1.7/8"X12	Z1.1/2"X11.5				57	57	48		
1JN9-24	U1.7/8"X12	Z1.1/2"X11.5				57	57	48		
1JN9-24-20	U1.7/8"X12	Z1.1/4"X11.5				57	57	48		
1JN9-32-24	U2.1/2"X12	Z1.1/2"X11.5				66	66	65		
1JN9-32	U2.1/2"X12	Z2"X11.5				66	66	65		

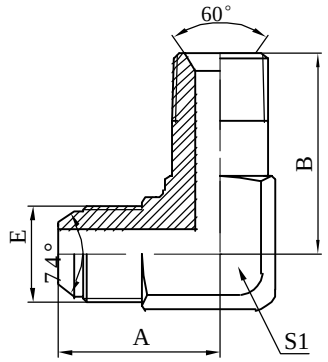

1JN9-L

90°JIC外螺纹74°外锥/加长布锥管外螺纹
90°JIC MALE 74°CONE/LONG NPT MALE

代号 PART NO.	螺纹 THREADE					尺 寸 DIMENSIONS				
	E	F				A	B	S1		
1JN9-04-02L	U7/16"X20	Z1/8"X27				22	30	11		
1JN9-04L	U7/16"X20	Z1/4"X18				29	40.1	14		
1JN9-05-02L	U1/2"X20	Z1/8"X27				29	31	14		
1JN9-05-04L	U1/2"X20	Z1/4"X18				29	40.1	14		
1JN9-06-04L	U9/16"X18	Z1/4"X18				29	40.1	14		
1JN9-06-08L	U9/16"X18	Z1/2"X14				37	55.1	22		
1JN9-08-06L	U3/4"X16	Z3/8"X18				33	46.2	19		
1JN9-08L	U3/4"X16	Z1/2"X14				37	55.1	22		
1JN9-10-08L	U7/8"X14	Z1/2"X14				37	55.1	22		
1JN9-12-08L	U1.1/16"X12	Z1/2"X14				40	56.9	27		
1JN9-12L	U1.1/16"X12	Z3/4"X14				40	62	27		
1JN9-16-12L	U1.5/16"X12	Z3/4"X14				49	69.9	33		
1JN9-16L	U1.5/16"X12	Z1"X11.5				49	76.5	33		
1JN9-20L	U1.5/8"X12	Z1.1/4"X11.5				57	93.7	44		
1JN9-24L	U1.7/8"X12	Z1.1/2"X11.5				57	104.1	48		
1JN9-32L	U2.1/2"X12	Z2"X11.5				66	122.2	65		

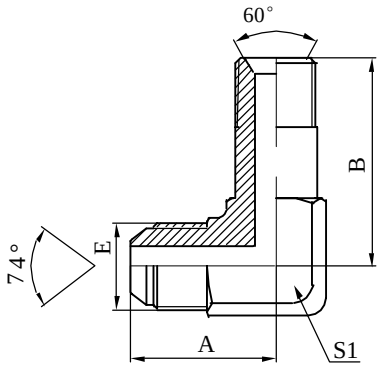

1JN9-LL

90°JIC外螺纹74°外锥/特长布锥管外螺纹
90°JIC MALE 74°CONE/LONGGER NPT MALE

代号 PART NO.	螺纹 THREADE					尺 寸 DIMENSIONS				
	E	F				A	B	S1		
1JN9-04-02LL	U7/16"X20	Z1/8"X27				22	39.6	11		
1JN9-04LL	U7/16"X20	Z1/4"X18				29	52.6	14		
1JN9-05-04LL	U1/2"X20	Z1/4"X18				29	52.6	14		
1JN9-06-04LL	U9/16"X18	Z1/4"X18				29	52.6	14		
1JN9-06LL	U9/16"X18	Z3/8"X18				30	61.5	17		
1JN9-08-06LL	U3/4"X16	Z3/8"X18				33	61.5	19		
1JN9-10-08LL	U7/8"X14	Z1/2"X14				37	72.9	22		
1JN9-12LL	U1.1/16"X12	Z3/4"X14				40	83.3	27		
1JN9-16LL	U1.5/16"X12	Z1"X11.5				49	102.9	33		
1JN9-20LL	U1.5/8"X12	Z1.1/4"X11.5				57	127	44		
1JN9-24LL	U1.7/8"X12	Z1.1/2"X11.5				57	141	48		
1JN9-32LL	U2.1/2"X12	Z2"X11.5				66	168.4	65		

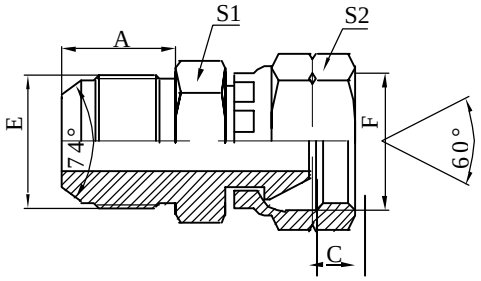

2JB

美制JIC外螺纹74°外锥
/英管内螺纹60°外锥
JIC MALE 74°CONE/
BSP FEMALE 60°CONE

代号 PART NO.	螺纹 THREADE					尺 寸 DIMENSIONS				
	E	F				A	C	S1	S2	
2JB-04	U7/16"X20	G1/4"X19				14	5.5	14	19	
2JB-04-06	U7/16"X20	G3/8"X19				14	6.5	17	22	
2JB-04-08	U7/16"X20	G1/2"X14				14	8	22	27	
2JB-06	U9/16"X18	G3/8"X19				14	6.5	17	22	
2JB-06-08	U9/16"X18	G1/2"X14				14	8	22	27	
2JB-06-10	U9/16"X18	G5/8"X14				14	10.5	22	30	
2JB-08	U3/4"X16	G1/2"X14				16.7	8	22	27	
2JB-08-06	U3/4"X16	G3/8"X19				16.7	6.5	22	22	
2JB-08-10	U3/4"X16	G5/8"X14				16.7	10.5	22	30	
2JB-10	U7/8"X16	G5/8"X14				19.5	10.5	22	30	
2JB-12	U1.1/16"X12	G3/4"X14				22	11.5	30	32	
2JB-12-08	U1.1/16"X12	G1/2"X14				22	8	30	27	
2JB-12-10	U1.1/16"X12	G5/8"X14				22	10.5	30	30	
2JB-12-16	U1.1/16"X12	G1"X11				22	11.5	32	41	
2JB-16	U1.5/16"X12	G1"X11				23	11.5	36	41	
2JB-16-20	U1.5/16"X12	G1.1/4"X11				23	12	41	50	
2JB-20	U1.5/8"X12	G1.1/4"X11				24.5	12	46	50	
2JB-20-24	U1.5/8"X12	G1.1/2"X11				24.5	13	46	55	
2JB-24	U1.7/8"X12	G1.1/2"X11				27.5	13	50	55	
2JB-32	U2.1/2"X12	G2"X11				34	16	70	70	

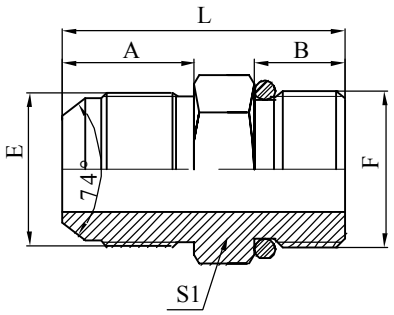

1JG

美制JIC外螺纹74°外锥/
英管外螺纹O型圈
JIC MALE 74 °CONE/
BSP MALE O-RING

代号 PART NO.	螺纹 THREADE					尺 寸 DIMENSIONS				
	E	F				A	B	S1	L	
1JG-04-02	U7/16"X20	G1/8"X28				14	9	14	29	
1JG-04	U7/16"X20	G1/4"X19				14	12	19	33	
1JG-04-06	U7/16"X20	G3/8"X19				14	13.5	22	35	
1JG-04-08	U7/16"X20	G1/2"X14				14	16	27	39	
1JG-05-04	U1/2"X20	G1/4"X19				14	12	19	33	
1JG-05-06	U1/2"X20	G3/8"X19				14	13.5	22	35	
1JG-05-08	U1/2"X20	G1/2"X14				14	16	27	39	
1JG-06-04	U9/16"X18	G1/4"X19				14	12	19	32	
1JG-06	U9/16"X18	G3/8"X19				14	13.5	22	35	
1JG-06-08	U9/16"X18	G1/2"X14				14	16	27	39	
1JG-08-04	U3/4"X16	G1/4"X19				16.7	12	22	37	
1JG-08-06	U3/4"X16	G3/8"X19				16.7	13.5	22	38.5	
1JG-08	U3/4"X16	G1/2"X14				16.7	16	27	41	
1JG-08-12	U3/4"X16	G3/4"X14				16.7	18.5	32	46	
1JG-10-06	U7/8"X14	G3/8"X19				19.5	13.5	24	42	
1JG-10-08	U7/8"X14	G1/2"X14				19.5	16	27	45	
1JG-10-12	U7/8"X14	G3/4"X14				19.5	18.5	32	49	
1JG-12-08	U1.1/16"X12	G1/2"X14				22	16	30	47	
1JG-12	U1.1/16"X12	G3/4"X14				22	18.5	32	51	
1JG-12-16	U1.1/16"X12	G1"X11				22	20.5	19	54	
1JG-12-20	U1.1/16"X12	G1.1/4"X11				22	20.5	50	56	
1JG-16-12	U1.5/16"X12	G3/4"X14				23	18.5	36	52	
1JG-16	U1.5/16"X12	G1"X11				23	20.5	41	55	
1JG-16-20	U1.5/16"X12	G1.1/4"X11				23	20.5	50	57	
1JG-20-16	U1.5/8"X12	G1"X11				24.5	20.5	46	58	
1JG-20	U1.5/8"X12	G1.1/4"X11				24.5	20.5	50	58	
1JG-24-16	U1.7/8"X12	G1"X11				27.5	20.5	50	61	
1JG-24-20	U1.7/8"X12	G1.1/4"X11				27.5	20.5	50	61	
1JG-24	U1.7/8"X12	G1.1/2"X11				27.5	23	55	67	

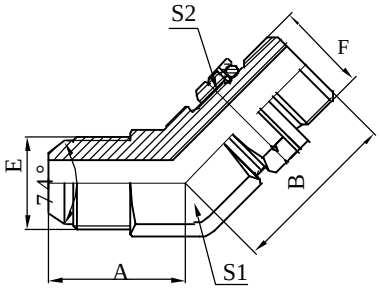

1JG4-OG

45°美制JIC外螺纹74°外锥/
英管外螺纹O型圈
45°JIC MALE 74°CONE/
BSP MALE O-RING

代号 PART NO.	螺纹 THREADE					尺 寸 DIMENSIONS				
	E	F				A	B	S1	S2	
1JG4-04OG	U7/16"X20	G1/4"X19				22	28	14	19	
1JG4-05-04OG	U1/2"X20	G1/4"X19				22	28	14	19	
1JG4-06-04OG	U9/16"X18	G1/4"X19				22	28	17	19	
1JG4-06OG	U9/16"X18	G3/8"X19				22	32	17	22	
1JG4-08-06OG	U3/4"X16	G3/8"X19				25	32	19	22	
1JG4-08OG	U3/4"X16	G1/2"X14				27	36	22	27	
1JG4-10-08OG	U7/8"X14	G1/2"X14				27	38	22	27	
1JG4-10OG	U7/8"X14	G5/8"X14				27	38	22	30	
1JG4-12-10OG	U1.1/16"X12	G5/8"X14				33	38.5	27	30	
1JG4-12-16OG	U1.1/16"X12	G1"X11				37	44	33	41	
1JG4-12OG	U1.1/16"X12	G3/4"X14				33	42	27	32	
1JG4-16-12OG	U1.5/16"X12	G3/4"X14				37	44	33	32	
1JG4-16OG	U1.5/16"X12	G1"X11				37	44	33	41	
1JG4-20OG	U1.5/8"X12	G1.1/4"X11				40	47.5	44	50	
1JG4-24OG	U1.7/8"X12	G1.1/2"X11				47	51.5	53	55	

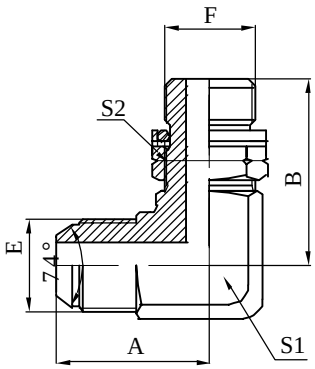

1JG9-OG

90°美制JIC外螺纹74°外锥/
英管外螺纹O型圈
90°JIC MALE 74°CONE/
BSP MALE O-RING

代号 PART NO.	螺纹 THREADE					尺 寸 DIMENSIONS				
	E	F				A	B	S1	S2	
1JG9-04-02OG	U7/16"X20	G1/8"X28				22	26.2	11	14	
1JG9-04-06OG	U7/16"X20	G3/8"X19				30	36.8	17	22	
1JG9-04OG	U7/16"X20	G1/4"X19				29	31.3	14	19	
1JG9-05-04OG	U1/2"X20	G1/4"X19				29	31.8	14	19	
1JG9-05-06OG	U1/2"X20	G3/8"X19				30	35.8	17	22	
1JG9-05-08OG	U1/2"X20	G1/2"X14				37	43.2	22	27	
1JG9-06-04OG	U9/16"X18	G1/4"X19				29	31.3	14	19	
1JG9-06-08OG	U9/16"X18	G1/2"X14				37	43.2	22	27	
1JG9-06OG	U9/16"X18	G3/8"X19				30	35.8	17	22	
1JG9-08-04OG	U3/4"X16	G1/4"X19				33	33.5	19	19	
1JG9-08-06OG	U3/4"X16	G3/8"X19				33	36.8	19	22	
1JG9-08OG	U3/4"X16	G1/2"X14				37	43.2	22	27	
1JG9-08-12OG	U3/4"X16	G3/4"X14				40	49.3	27	32	
1JG9-10-06OG	U7/8"X16	G3/8"X19				37	39.2	22	22	
1JG9-10-08OG	U7/8"X16	G1/2"X14				37	43.2	22	27	
1JG9-10-12OG	U7/8"X16	G3/4"X14				40	49.3	27	32	
1JG9-12OG	U1.1/16"X12	G3/4"X14				40	49.3	27	32	
1JG9-12-08OG	U1.1/16"X12	G1/2"X14				40	46.5	27	27	
1JG9-12-16OG	U1.1/16"X12	G1"X11				49	53	33	41	
1JG9-16OG	U1.5/16"X12	G1"X11				49	53	33	41	
1JG9-16-12OG	U1.5/16"X12	G3/4"X14				49	53	33	32	
1JG9-16-20OG	U1.5/16"X12	G1.1/4"X11				57	58	44	50	
1JG9-20OG	U1.5/8"X12	G1.1/4"X11				57	58	44	50	
1JG9-20-16OG	U1.5/8"X12	G1"X11				57	58	44	41	
1JG9-24-16OG	U1.7/8"X12	G1"X11				57	63	48	41	
1JG9-24-20OG	U1.7/8"X12	G1.1/4"X11				57	63	48	50	
1JG9-24OG	U1.7/8"X12	G1.1/2"X11				57	63	48	55	

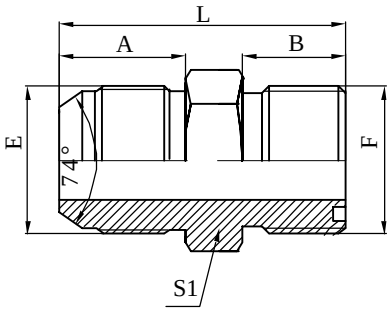

1JF

美制JIC外螺纹74°外锥/ORFS外螺纹
JIC MALE 74°CONE/ORFS MALE

代号 PART NO.	螺纹 THREADE					尺 寸 DIMENSIONS				
	E	F				A	B	S1	L	
1JF-04	U7/16"X20	U9/16"X18				14	12	17	32	
1JF-05-04	U1/2"X20	U9/16"X18				14	12	17	32	
1JF-05-06	U1/2"X20	U11/16"X16				14	14	19	34	
1JF-06-04	U9/16"X18	U9/16"X18				14	12	17	32	
1JF-08-06	U3/4"X16	U11/16"X16				16.7	14	19	37	
1JF-08	U3/4"X16	U13/16"X16				16.7	15	22	40	
1JF-10-08	U7/8"X16	U13/16"X16				19.5	15	24	43	
1JF-10	U7/8"X16	U1"X14				19.5	16.5	27	46	
1JF-12-10	U1.1/16"X12	U1"X14				22	16.5	30	49	
1JF-12	U1.1/16"X12	U1.3/16"X12				22	17	32	50	
1JF-16-12	U1.5/16"X12	U1.3/16"X12				23	17	36	51	
1JF-16	U1.5/16"X12	U1.7/16"X12				23	18.5	41	54	
1JF-20-16	U1.5/8"X12	U1.7/16"X12				24.5	18.5	46	56	
1JF-20	U1.5/8"X12	U1.11/16"X12				24.5	19.5	46	57	
1JF-24-20	U1.7/8"X12	U1.11/16"X12				27.5	19.5	50	64	

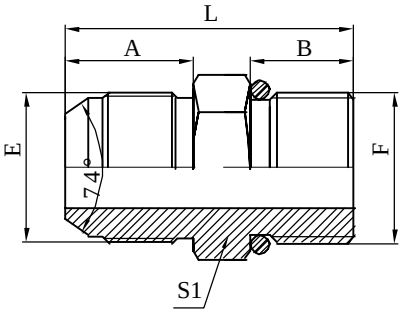

1JH

JIC外螺纹74°外锥/
公制外螺纹O型圈密封
JIC MALE 74°CONE/
METRIC MALE END O-RING

代号 PART NO.	螺纹 THREADE					尺 寸 DIMENSIONS				
	E	F				A	B	S1	L	
1JH-04-10	U7/16"X20	M10x1				14	11	14	31	
1JH-04-12	U7/16"X20	M12x1.5				14	11	17	31	
1JH-04-14	U7/16"X20	M14x1.5				14	11	19	32	
1JH-05-10	U1/2"X20	M10x1				14	11	14	31	
1JH-05-12	U1/2"X20	M12x1.5				14	11	17	31	
1JH-05-14	U1/2"X20	M14x1.5				14	11	19	31	
1JH-06-14	U9/16"X18	M14x1.5				14	11	19	32	
1JH-06-16	U9/16"X18	M16x1.5				14	11	22	33	
1JH-06-18	U9/16"X18	M18x1.5				14	11	24	33	
1JH-08-14	U3/4"X16	M14x1.5				16.7	11	22	36	
1JH-08-16	U3/4"X16	M16x1.5				16.7	11	22	36	
1JH-08-18	U3/4"X16	M18x1.5				16.7	11	24	36	
1JH-08-22	U3/4"X16	M22x1.5				16.7	12	27	37	
1JH-10-16	U7/8"X14	M16x1.5				13.5	11	24	33	
1JH-10-18	U7/8"X14	M18x1.5				13.5	11	24	33	
1JH-10-22	U7/8"X14	M22x1.5				13.5	12	27	33	
1JH-12-22	U1.1/16"X12	M22x1.5				16	12	30	38	
1JH-12-27	U1.1/16"X12	M27x2				16	13	32	39	
1JH-16-27	U1.5/16"X12	M27x2				16	13	36	40	

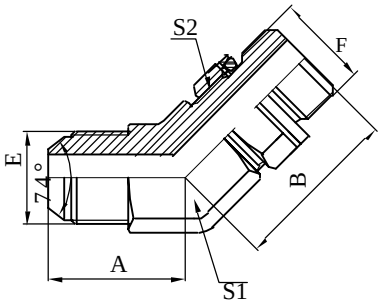

1JH4-OG

45°美制JIC外螺纹74°外锥/
公制外螺纹可调向柱端
45°JIC MALE 74°CONE/METRIC MALE
ADJUSTABLE STUD END

代号 PART NO.	螺纹 THREADE					尺 寸 DIMENSIONS				
	E	F				A	B	S1	S2	
1JH4-04-10OG	U7/16"X20	M10x1				20	23.5	11	14	
1JH4-04-12OG	U7/16"X20	M12x1.5				22	27.5	14	17	
1JH4-04-14OG	U7/16"X20	M14x1.5				22	28.3	14	19	
1JH4-05-12OG	U1/2"X20	M12x1.5				22	28.3	14	17	
1JH4-05-14OG	U1/2"X20	M14x1.5				22	28.3	14	19	
1JH4-06-14OG	U9/16"X18	M14x1.5				22	28.3	14	19	
1JH4-06-16OG	U9/16"X18	M16x1.5				22	29	17	22	
1JH4-08-16OG	U3/4"X16	M16x1.5				25	30	19	22	
1JH4-08-18OG	U3/4"X16	M18x1.5				25	31	19	24	
1JH4-10-16OG	U7/8"X14	M16x1.5				27	31	22	22	
1JH4-10-18OG	U7/8"X14	M18x1.5				27	32	22	24	
1JH4-10-22OG	U7/8"X14	M22x1.5				33	33	27	27	
1JH4-12-22OG	U1.1/16"X12	M22x1.5				33	34.5	27	27	
1JH4-12-27OG	U1.1/16"X12	M27x2				33	39.5	27	32	
1JH4-16-27OG	U1.5/16"X12	M27x2				37	41	33	32	

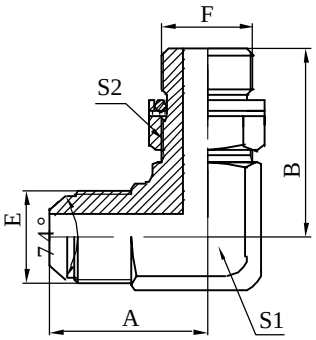

1JH9-OG

90°美制JIC外螺纹74°外锥/
公制外螺纹可调向柱端
90°JIC MALE 74°CONE/METRIC MALE
ADJUSTABLE STUD END

代号 PART NO.	螺纹 THREADE					尺 寸 DIMENSIONS				
	E	F				A	B	S1	S2	
1JH9-04-10OG	U7/16"X20	M10x1				22	27.5	11	14	
1JH9-04-12OG	U7/16"X20	M12x1.5				29	30.3	14	17	
1JH9-04-14OG	U7/16"X20	M14x1.5				29	32	14	19	
1JH9-05-12OG	U1/2"X20	M12x1.5				29	32	14	17	
1JH9-05-14OG	U1/2"X20	M14x1.5				29	32	14	19	
1JH9-06-14OG	U9/16"X18	M14x1.5				29	32	14	19	
1JH9-06-16OG	U9/16"X18	M16x1.5				30	34.8	17	22	
1JH9-08-16OG	U3/4"X16	M16x1.5				33	38	19	22	
1JH9-08-18OG	U3/4"X16	M18x1.5				33	38	19	24	
1JH9-10-16OG	U7/8"X14	M16x1.5				37	38	22	22	
1JH9-10-18OG	U7/8"X14	M18x1.5				37	39.5	22	24	
1JH9-10-22OG	U7/8"X14	M22x1.5				40	42.5	27	27	
1JH9-12-22OG	U1.1/16"X12	M22x1.5				40	44	27	27	
1JH9-12-27OG	U1.1/16"X12	M27x2				40	48.5	27	32	
1JH9-16-27OG	U1.5/16"X12	M27x2				49	41	33	32	

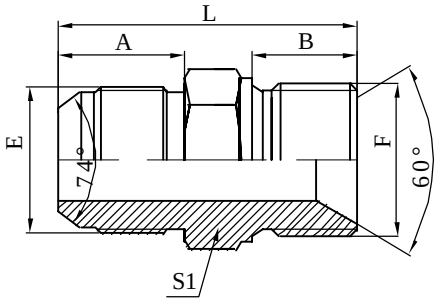

1JM

JIC外螺纹74°外锥/公制外螺纹
60°内锥或六角端面组合垫密封
JIC MALE 74°CONE/METRIC MALE DOUBLE
USE FOR 60°SEAT OR BONDED SEAL

代号 PART NO.	螺纹 THREADE					尺 寸 DIMENSIONS				
	E	F				A	B	S1	L	
1JM-04-12	U7/16"X20	M12x1.5				14	10	17	32	
1JM-04-14	U7/16"X20	M14x1.5				14	11	19	33	
1JM-05-12	U1/2"X20	M12x1.5				14	10	17	32	
1JM-05-14	U1/2"X20	M14x1.5				14	11	19	33	
1JM-06-12	U9/16"X18	M12x1.5				14	10	17	32	
1JM-06-14	U9/16"X18	M14x1.5				14	11	19	33	
1JM-06-16	U9/16"X18	M16x1.5				14	12	22	35	
1JM-06-18	U9/16"X18	M18x1.5				14	12	24	50	
1JM-08-16	U3/4"X16	M16x1.5				16.7	12	22	38	
1JM-08-18	U3/4"X16	M18x1.5				16.7	12	24	38	
1JM-08-22	U3/4"X16	M22x1.5				16.7	14	27	41	
1JM-10-22	U7/8"X16	M22x1.5				19.5	14	27	44	
1JM-12-22	U1.1/16"X12	M22x1.5				22	14	30	48	

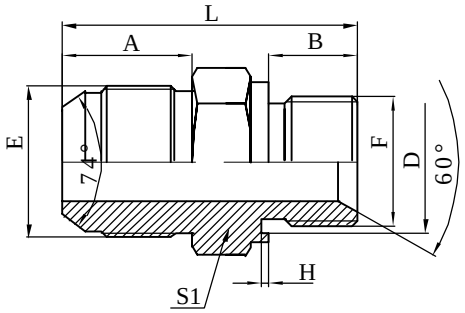

1JM-WD

JIC外螺纹74°外锥/
公制外螺纹胶垫密封
JIC MALE 74°CONE/
METRIC MALE CAPTIVE SEAL

代号 PART NO.	螺纹 THREADE				尺 寸 DIMENSIONS					
	E	F			A	B	D	H	S1	L
1JM-04-12WD	U7/16"X20	M12x1.5			14	10	14.2	1.2	17	32
1JM-05-14WD	U1/2"X20	M14x1.5			14	11	16.3	1.2	19	33
1JM-06-14WD	U9/16"X18	M14x1.5			14	11	16.3	1.2	19	33
1JM-06-18WD	U9/16"X18	M18x1.5			14	12	20.7	1.2	24	36.5
1JM-08-18WD	U3/4"X16	M18x1.5			16.7	12	20.7	1.2	24	39
1JM-08-22WD	U3/4"X16	M22x1.5			16.7	14	24.1	1.2	27	43.5
1JM-10-18WD	U7/8"X16	M18x1.5			19.5	12	20.7	1.2	24	41.5
1JM-10-22WD	U7/8"X16	M22x1.5			19.5	14	24.1	1.2	27	46
1JM-12-22WD	U1.1/16"X12	M22x1.5			22	14	24.1	1.2	30	49

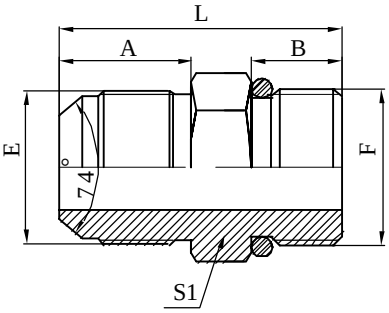

1JO

美制JIC外螺纹74°外锥/
SAE外螺纹带O型圈
JIC MALE 74°CONE/
SAE O-RING BOSS

代号 PART NO.	螺纹 THREADE					尺 寸 DIMENSIONS				
	E	F				A	B	S1	L	
1JO-04	U7/16"X20	U7/16"X20				14	10	14	31	
1JO-04-05	U7/16"X20	U1/2"X20				14	10	17	30	
1JO-04-06	U7/16"X20	U9/16"X18				14	12	17	32	
1JO-04-08	U7/16"X20	U3/4"X16				14	12	24	35	
1JO-05	U1/2"X20	U1/2"X20				14	10	17	30	
1JO-05-04	U1/2"X20	U7/16"X20				14	10	14	30	
1JO-05-06	U1/2"X20	U9/16"X18				14	12	17	32	
1JO-05-08	U1/2"X20	U3/4"X16				14	12	24	35	
1JO-06	U9/16"X18	U9/16"X18				14	12	17	33	
1JO-06-04	U9/16"X18	U7/16"X20				14	10	17	31	
1JO-06-05	U9/16"X18	U1/2"X20				14	10	17	30	
1JO-06-08	U9/16"X18	U3/4"X16				14	12	24	35	
1JO-06-10	U9/16"X18	U7/8"X14				14	13.5	27	36	
1JO-06-12	U9/16"X18	U1.1/16"X12				14	16	32	39	
1JO-08	U3/4"X16	U3/4"X16				16.7	12	24	37	
1JO-08-04	U3/4"X16	U7/16"X20				16.7	10	22	35	
1JO-08-06	U3/4"X16	U9/16"X18				16.7	12	22	37	
1JO-08-10	U3/4"X16	U7/8"X14				16.7	13.5	27	39	
1JO-08-12	U3/4"X16	U1.1/16"X12				16.7	16	32	42	
1JO-10	U7/8"X14	U7/8"X14				19.5	13.5	27	41.5	
1JO-10-08	U7/8"X14	U3/4"X16				19.5	12	24	40	
1JO-10-12	U7/8"X14	U1.1/16"X12				19.5	16	32	45	
1JO-12	U1.1/16"X12	U1.1/16"X12				22	16	32	47	
1JO-12-08	U1.1/16"X12	U3/4"X16				22	12	30	43	
1JO-12-10	U1.1/16"X12	U7/8"X14				22	13.5	30	45	
1JO-12-16	U1.1/16"X12	U1.5/16"X12				22	17	41	50	
1JO-16	U1.5/16"X12	U1.5/16"X12				23	17	41	51	
1JO-16-12	U1.5/16"X12	U1.1/16"X12				23	16	36	50	
1JO-16-20	U1.5/16"X12	U1.5/8"X12				23	18	50	55	
1JO-20	U1.5/8"X12	U1.5/8"X12				24.5	18	50	56	

接上页

代号 PART NO.	螺纹 THREADE					尺 寸 DIMENSIONS				
	E	F				A	B	S1	L	
1JO-16-20	U1.5/16"X12	U1.5/8"X12				23	18	50	55	
1JO-20-16	U1.5/8"X12	U1.5/16"X12				24.5	17	46	55	
1JO-20-24	U1.5/8"X12	U1.7/8"X12				24.5	18.5	55	59	
1JO-24	U1.7/8"X12	U1.7/8"X12				27.5	18.5	55	62	
1JO-24-20	U1.7/8"X12	U1.5/8"X12				27.5	18	50	59	
1JO-24-32	U1.7/8"X12	U2.1/2"X12				27.5	22	70	67.5	
1JO-32	U2.1/2"X12	U2.1/2"X12				34	22	70	74	

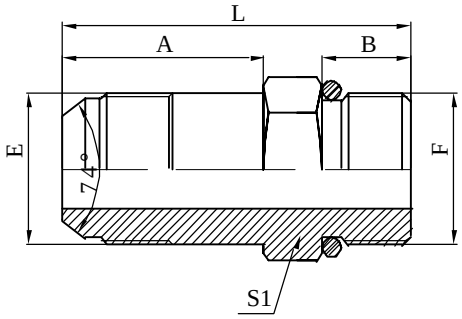

1JO-L

加长美制JIC外螺纹74°\外锥/
SAE外螺纹带O型圈
LONG JIC MALE 74°CONE/
SAE O-RING BOSS

代号 PART NO.	螺纹 THREADE					尺 寸 DIMENSIONS				
	E	F				A	B	S1	L	
1JO-04L	U7/16"X20	U7/16"X20				35	10	14	51	
1JO-05L	U1/2"X20	U1/2"X20				37	10	17	53	
1JO-06L	U9/16"X18	U9/16"X18				39	12	17	57	
1JO-08L	U3/4"X16	U3/4"X16				48	12	24	69	
1JO-10L	U7/8"X14	U7/8"X14				53	13.5	27	75	
1JO-12L	U1.1/16"X12	U1.1/16"X12				63	16	32	88	
1JO-16L	U1.5/16"X12	U1.5/16"X12				72	17	41	100	
1JO-20L	U1.5/8"X12	U1.5/8"X12				88.1	18	50	120	

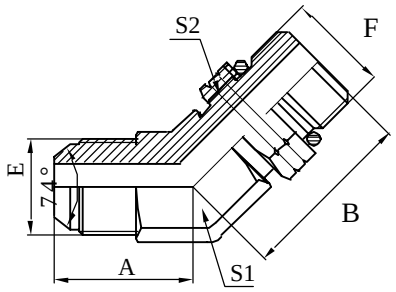

1JO4-OG

45°JIC外螺纹74°外锥/
SAE外螺纹带O型圈
45°JIC MALE 74°CONE/
SAE O-RING BOSS

代号 PART NO.	螺纹 THREADE					尺 寸 DIMENSIONS				
	E	F				A	B	S1	S2	
1JO4-04OG	U7/16"X20	U7/16"X20				20	24	11	17	
1JO4-04-06OG	U7/16"X20	U9/16"X18				22	27.5	14	19	
1JO4-04-08OG	U7/16"X20	U3/4"X16				25	32.5	19	24	
1JO4-05OG	U1/2"X20	U1/2"X20				22	26.7	14	17	
1JO4-05-04OG	U1/2"X20	U7/16"X20				22	26.7	14	17	
1JO4-06OG	U9/16"X18	U9/16"X18				22	28	14	19	
1JO4-06-04OG	U9/16"X18	U7/16"X20				22	26	14	17	
1JO4-06-05OG	U9/16"X18	U1/2"X20				22	26	14	17	
1JO4-06-08OG	U9/16"X18	U3/4"X16				25	32.5	19	24	
1JO4-06-10OG	U9/16"X18	U7/8"X14				27	38.5	22	27	
1JO4-08OG	U3/4"X16	U3/4"X16				25	32.5	19	24	
1JO4-08-06OG	U3/4"X16	U9/16"X18				25	28	19	19	
1JO4-08-10OG	U3/4"X16	U7/8"X14				27	38.7	22	27	
1JO4-08-12OG	U3/4"X16	U1.1/16"X12				33	43.9	27	32	
1JO4-10OG	U7/8"X14	U7/8"X14				27	38.7	22	27	
1JO4-10-08OG	U7/8"X14	U3/4"X16				27	33	22	27	
1JO4-10-12OG	U7/8"X14	U1.1/16"X12				33	43.9	27	32	
1JO4-12OG	U1.1/16"X12	U1.1/16"X12				33	43.5	27	32	
1JO4-12-10OG	U1.1/16"X12	U7/8"X14				33	42	27	27	
1JO4-12-16OG	U1.1/16"X12	U1.5/16"X12				37	45.5	33	41	
1JO4-16OG	U1.5/16"X12	U1.5/16"X12				37	45.5	33	41	
1JO4-16-12OG	U1.5/16"X12	U1.1/16"X12				37	45	33	32	
1JO4-16-20OG	U1.5/16"X12	U1.5/8"X12				40	47	44	50	
1JO4-20OG	U1.5/8"X12	U1.5/8"X12				40	48.5	44	50	
1JO4-20-24OG	U1.5/8"X12	U1.7/8"X12				47	50	53	55	
1JO4-24OG	U1.7/8"X12	U1.7/8"X12				47	50	53	55	
1JO4-32OG	U1.7/8"X12	U2.1/2"X12				55	54	65	70	

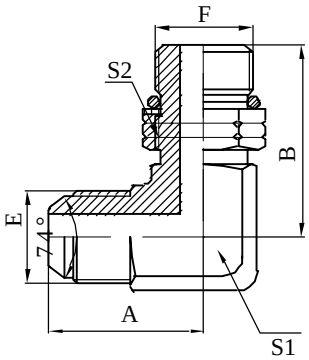

1JO9-OG

90°JIC外螺纹74°外锥/
SAE外螺纹带O型圈
90°JIC MALE 74°CONE/
SAE O-RING BOSS

代号 PART NO.	螺纹 THREADE					尺 寸 DIMENSIONS				
	E	F				A	B	S1	S2	
1JO9-04OG	U7/16"X20	U7/16"X20				22	27.2	11	17	
1JO9-04-06OG	U7/16"X20	U9/16"X18				29	31.8	14	19	
1JO9-05-04OG	U1/2"X20	U7/16"X20				29	30	14	17	
1JO9-05OG	U1/2"X20	U1/2"X20				29	29	14	17	
1JO9-05-06OG	U1/2"X20	U9/16"X18				29	31.8	14	19	
1JO9-06OG	U9/16"X18	U9/16"X18				29	31.8	14	19	
1JO9-06-04OG	U9/16"X18	U7/16"X20				29	30	14	17	
1JO9-06-05OG	U9/16"X18	U1/2"X20				29	29.9	14	17	
1JO9-06-08OG	U9/16"X18	U3/4"X16				33	36.8	19	24	
1JO9-08-04OG	U3/4"X16	U7/16"X20				33	33	19	17	
1JO9-08OG	U3/4"X16	U3/4"X16				33	36.8	19	24	
1JO9-08-06OG	U3/4"X16	U9/16"X18				33	33.5	19	19	
1JO9-08-10OG	U3/4"X16	U7/8"X14				37	44	22	27	
1JO9-08-12OG	U3/4"X16	U1.1/16"X12				40	51	27	32	
1JO9-10OG	U7/8"X14	U7/8"X14				37	44	22	27	
1JO9-10-08OG	U7/8"X14	U3/4"X16				37	40	22	27	
1JO9-10-12OG	U7/8"X14	U1.1/16"X12				40	51	27	32	
1JO9-12OG	U1.1/16"X12	U1.1/16"X12				40	51	27	32	
1JO9-12-10OG	U1.1/16"X12	U7/8"X14				40	47	27	27	
1JO9-12-16OG	U1.1/16"X12	U1.5/16"X12				49	54.5	33	41	
1JO9-16OG	U1.5/16"X12	U1.5/16"X12				49	54.5	33	41	
1JO9-16-12OG	U1.5/16"X12	U1.1/16"X12				49	54.5	33	32	
1JO9-16-20OG	U1.5/16"X12	U1.5/8"X12				57	59	44	50	
1JO9-20OG	U1.5/8"X12	U1.5/8"X12				57	59	44	50	
1JO9-20-24OG	U1.5/8"X12	U1.7/8"X12				57	63	48	55	
1JO9-24OG	U1.7/8"X12	U1.7/8"X12				57	63	48	55	
1JO9-32OG	U1.7/8"X12	U2.1/2"X12				66	76	65	70	

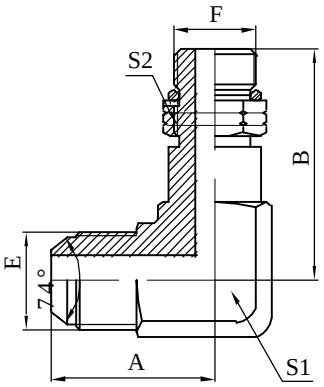

1JO9-OG/L

90°美制JIC外螺纹74°外锥/
加长SAE外螺纹带O型圈
90°JIC MALE 74°CONE/
LONG SAE O-RING BOSS

代号 PART NO.	螺纹 THREADE					尺 寸 DIMENSIONS				
	E	F				A	B	S1	S2	
1JO9-04OG/L	U7/16"X20	U7/16"X20				22	44	11	17	
1JO9-06OG/L	U9/16"X18	U9/16"X18				29	52.8	14	19	
1JO9-08OG/L	U3/4"X16	U3/4"X16				33	63.5	19	24	
1JO9-10OG/L	U7/8"X14	U7/8"X14				37	73.4	22	27	
1JO9-12OG/L	U1.1/16"X12	U1.1/16"X12				40	84.8	27	32	
1JO9-16OG/L	U1.5/16"X12	U1.5/16"X12				49	94.5	33	41	

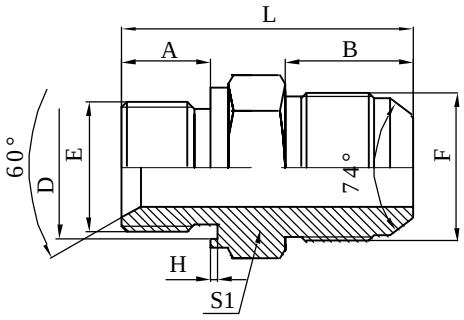

1BJ-WD

英管外螺纹胶垫密封/JIC外螺纹74°外锥

BSP MALE CAPTIVE SEAL/JIC MALE 74 °CONE

代号 PART NO.	螺纹 THREADE				尺 寸 DIMENSIONS					
	E	F			A	B	D	H	S1	L
1BJ-02-04WD	G1/8"X28	U7/16"X20			10	14	11.7	0.7	14	31.5
1BJ-04WD	G1/4"X19	U7/16"X20			12	14	16.3	1.2	19	34
1BJ-06-04WD	G3/8"X19	U7/16"X20			13.5	14	18.7	1.2	22	36
1BJ-08-04WD	G1/2"X14	U7/16"X20			16	14	23.7	1.2	27	43
1BJ-04-05WD	G1/4"X19	U1/2"X20			12	14	16.3	1.2	19	34
1BJ-06-05WD	G3/8"X19	U1/2"X20			13.5	14	18.7	1.2	22	36
1BJ-02-06WD	G1/8"X28	U9/16"X18			10	14	11.7	0.7	17	31.5
1BJ-04-06WD	G1/4"X19	U9/16"X18			12	14	16.3	1.2	19	34
1BJ-06WD	G3/8"X19	U9/16"X18			13.5	14	18.7	1.2	22	36
1BJ-08-06WD	G1/2"X14	U9/16"X18			16	14	23.7	1.2	27	43
1BJ-04-08WD	G1/4"X19	U3/4"X16			12	16.7	16.3	1.2	22	37
1BJ-06-08WD	G3/8"X19	U3/4"X16			13.5	16.7	18.7	1.2	22	39
1BJ-08WD	G1/2"X14	U3/4"X16			16	16.7	23.7	1.2	27	45.5
1BJ-08-10WD	G1/2"X14	U7/8"X16			16	19.5	23.7	1.2	27	49
1BJ-12-10WD	G3/4"X14	U7/8"X16			18.5	19.5	29	1.2	32	50
1BJ-08-12WD	G1/2"X14	U1.1/16"X12			16	22	23.7	1.2	30	50.5
1BJ-12WD	G3/4"X14	U1.1/16"X12			18.5	22	29	1.2	32	52.5
1BJ-16-12WD	G1"X11	U1.1/16"X12			20.5	22	35.5	1.6	41	58.5
1BJ-12-16WD	G3/4"X14	U1.5/16"X12			18.5	23	29	1.2	36	55.5
1BJ-16WD	G1"X11	U1.5/16"X12			20.5	23	35.5	1.6	41	59.5
1BJ-20-16WD	G1.1/4"X11	U1.5/16"X12			20.5	23	45.6	1.6	50	61.5
1BJ-16-20WD	G1"X11	U1.5/8"X12			20.5	24.5	35.5	1.6	46	61
1BJ-20WD	G1.1/4"X11	U1.5/8"X12			20.5	24.5	45.6	1.6	50	63
1BJ-24-20WD	G1.1/2"X11	U1.5/8"X12			23	24.5	50.5	1.6	55	65
1BJ-20-24WD	G1.1/4"X11	U1.7/8"X12			20.5	27.5	45.6	1.6	50	66
1BJ-24WD	G1.1/2"X11	U1.7/8"X12			23	27.5	50.5	1.6	55	68.5

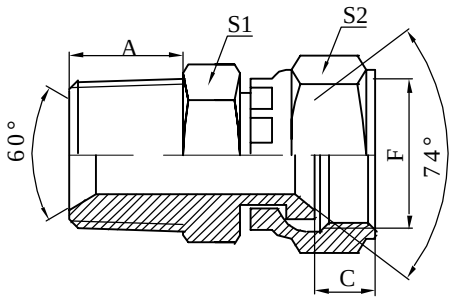

2TJ

英锥管外螺纹/JIC内螺纹74°内锥
BSPT MALE/JIC FEMALE 74°SEAT

代号 PART NO.	螺纹 THREADE					尺 寸 DIMENSIONS				
	E	F				A	C	S1	S2	
2TJ-02-04	ZG1/8"X28	U7/16"X20				10	8.5	14	17	
2TJ-04	ZG1/4"X19	U7/16"X20				14	8.5	17	17	
2TJ-04-05	ZG1/4"X19	U1/2"X20				14	9.5	17	19	
2TJ-04-06	ZG1/4"X19	U9/16"X18				14	10	17	19	
2TJ-06-05	ZG3/8"X19	U1/2"X20				14	9.5	17	19	
2TJ-06	ZG3/8"X19	U9/16"X18				14	10	17	19	
2TJ-06-08	ZG3/8"X19	U3/4"X16				14	11	19	24	
2TJ-08	ZG1/2"X14	U3/4"X16				19	11	22	24	
2TJ-08-10	ZG1/2"X14	U7/8"X14				19	11	22	27	
2TJ-08-12	ZG1/2"X14	U1.1/16"X12				19	13.5	27	32	
2TJ-12	ZG3/4"X14	U1.1/16"X12				19.5	13.5	30	32	
2TJ-12-16	ZG3/4"X14	U1.5/16"X12				19.5	14.5	36	41	
2TJ-16	ZG1"X11	U1.5/16"X12				24	14.5	36	41	
2TJ-20	ZG1.1/4"X11	U1.5/8"X12				24	15.5	46	50	
2TJ-24	ZG1.1/2"X11	U1.7/8"X12				25	18.5	50	55	

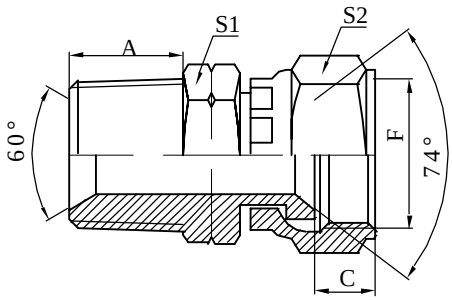

2NJ

布锥管外螺纹/JIC内螺纹74°内锥
NPT MALE/JIC FEMALE 74°SEAT

代号 PART NO.	螺纹 THREADE					尺 寸 DIMENSIONS				
	E	F				A	C	S1	S2	
2NJ-02-04	Z1/8"X27	U7/16"X20				10	8.5	14	17	
2NJ-02-05	Z1/8"X27	U1/2"X20				10	9.5	14	19	
2NJ-04	Z1/4"X18	U7/16"X20				14	8.5	17	17	
2NJ-04-05	Z1/4"X18	U1/2"X20				14	9.5	17	19	
2NJ-04-06	Z1/4"X18	U9/16"X18				14	10	17	19	
2NJ-04-08	Z1/4"X18	U3/4"X16				14	11	19	24	
2NJ-06	Z3/8"X18	U9/16"X18				14	10	17	19	
2NJ-06-08	Z3/8"X18	U3/4"X16				14	11	19	24	
2NJ-06-10	Z3/8"X18	U7/8"X14				14	11	22	27	
2NJ-08	Z1/2"X14	U3/4"X16				19	11	22	24	
2NJ-08-06	Z1/2"X14	U9/16"X18				19	10	22	19	
2NJ-08-10	Z1/2"X14	U7/8"X14				19	11	22	27	
2NJ-08-12	Z1/2"X14	U1.1/16"X12				19	13.5	27	32	
2NJ-12	Z3/4"X14	U1.1/16"X12				19.5	13.5	30	32	
2NJ-12-08	Z3/4"X14	U3/4"X16				19.5	11	27	24	
2NJ-12-10	Z3/4"X14	U7/8"X14				19.5	11	27	27	
2NJ-12-16	Z3/4"X14	U1.5/16"X12				19.5	14.5	36	41	
2NJ-16	Z1"X11.5	U1.5/16"X12				24	14.5	36	41	
2NJ-16-12	Z1"X11.5	U1.1/16"X12				24	13.5	36	32	
2NJ-16-20	Z1"X11.5	U1.5/8"X12				24	15.5	46	50	
2NJ-20	Z1.1/4"X11.5	U1.5/8"X12				24	15.5	46	50	
2NJ-20-24	Z1.1/4"X11.5	U1.7/8"X12				24	18.5	46	55	
2NJ-24-20	Z1.1/2"X11.5	U1.5/8"X12				25	15.5	50	50	
2NJ-24	Z1.1/2"X11.5	U1.7/8"X12				25	18.5	50	55	

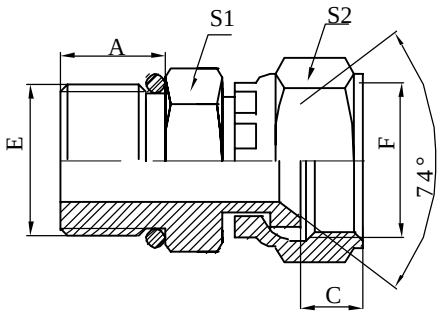

2GJ

英管外螺纹O型圈/JIC内螺纹74°外面
BSP MALE O-RING/JIC FEMALE 74 °CONE

代号 PART NO.	螺纹 THREADE					尺 寸 DIMENSIONS				
	E	F				A	C	S1	S2	
2GJ-04	G1/4"X19	U7/16"X20				12	8.5	19	17	
2GJ-04-05	G1/4"X19	U1/2"X20				12	9.5	19	19	
2GJ-04-06	G1/4"X19	U9/16"X18				12	10	19	19	
2GJ-06	G3/8"X19	U9/16"X18				13.5	10	22	19	
2GJ-06-08	G3/8"X19	U3/4"X16				13.5	11	22	24	
2GJ-08	G1/2"X14	U3/4"X16				16	11	27	24	
2GJ-08-06	G1/2"X14	U9/16"X18				16	10	27	19	
2GJ-08-10	G1/2"X14	U7/8"X16				16	11	27	27	
2GJ-12	G3/4"X14	U1.1/16"X12				18.5	13.5	32	32	
2GJ-12-08	G3/4"X14	U3/4"X16				18.5	11	32	24	
2GJ-12-10	G3/4"X14	U7/8"X16				18.5	11	32	27	
2GJ-12-16	G3/4"X14	U1.5/16"X12				18.5	14.5	32	41	
2GJ-16	G1"X11	U1.5/16"X12				20.5	14.5	41	41	
2GJ-20	G1.1/4"X11	U1.5/8"X12				20.5	15.5	50	50	
2GJ-24	G1.1/2"X11	U1.7/8"X12				23	18.5	55	55	

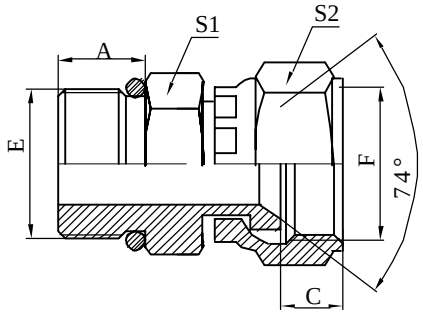

2OJ

美制SAE外螺纹带O型圈/
JIC内螺纹74°内锥
SAE O-RING BOSS/
JIC FEMALE 74 °SEAT

代号 PART NO.	螺纹 THREADE					尺 寸 DIMENSIONS				
	E	F				A	C	S1	S2	
2OJ-04	U7/16"X20	U7/16"X20				10	8.5	14	17	
2OJ-05	U1/2"X20	U1/2"X20				10	9.5	17	19	
2OJ-06	U9/16"X18	U9/16"X18				12	10	17	19	
2OJ-08	U3/4"X16	U3/4"X16				12	11	22	24	
2OJ-10	U7/8"X14	U7/8"X14				13.5	11	27	27	
2OJ-12	U1.1/16"X12	U1.1/16"X12				16	13.5	32	32	
2OJ-16	U1.5/16"X12	U1.5/16"X12				17	14.5	41	41	
2OJ-20	U1.5/8"X12	U1.5/8"X12				18	15.5	50	50	

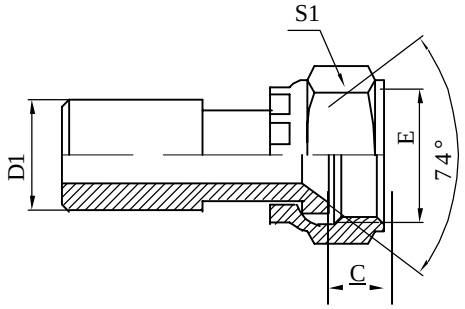

2WJ

焊接管/美制JIC内螺纹74°内锥
BUTT-WELD TUBE/JIC FEMALE 74 °SEAT

代号 PART NO.	螺纹 THREADE		管子直径TUBE O.D.			尺 寸 DIMENSIONS				
	E		D1			C		S1		
2WJ-10-04	U7/16"X20		10			8.5		17		
2WJ-12-05	U1/2"X20		12			9.5		19		
2WJ-14-04	U7/16"X20		14			8.5		17		
2WJ-14-06	U9/16"X18		14			10		19		
2WJ-18-08	U3/4"X16		18			11		24		
2WJ-20-10	U7/8"X14		20			11		27		
2WJ-22-12	U1.1/16"X12		22			13.5		32		
2WJ-28-16	U1.5/16"X12		28			14.5		41		
2WJ-34-20	U1.5/8"X12		34			15.5		50		

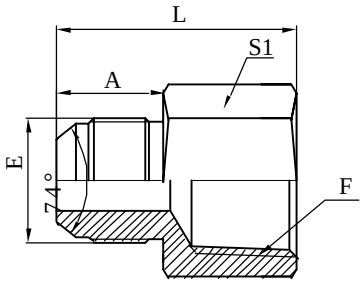

5JB

美制JIC外螺纹74°外锥/英管内螺纹
JIC MALE 74°CONE/BSP FEMALE

代号 PART NO.	螺纹 THREADE					尺 寸 DIMENSIONS				
	E	F				A		S1		L
5JB-04	U7/16"X20	G1/4"X19				14		19		32
5JB-04-02	U7/16"X20	G1/8"X28				14		14		29
5JB-04-06	U7/16"X20	G3/8"X19				14		22		34
5JB-06	U9/16"X18	G3/8"X19				14		22		34
5JB-06-08	U9/16"X18	G1/2"X14				14		27		34
5JB-08	U3/4"X16	G1/2"X14				16.7		27		37
5JB-08-10	U3/4"X16	G5/8"X14				16.7		30		43
5JB-10-12	U7/8"X16	G3/4"X14				19.5		32		44
5JB-12	U1.1/16"X12	G3/4"X14				22		36		52
5JB-12-16	U1.1/16"X12	G1"X11				22		41		56
5JB-16	U1.5/16"X12	G1"X11				23		41		57
5JB-16-20	U1.5/16"X12	G1.1/4"X11				23		50		59
5JB-20	U1.5/8"X12	G1.1/4"X11				24.5		50		61
5JB-24	U1.7/8"X12	G1.1/2"X11				27.5		55		65
5JB-32	U2.1/2"X12	G2"X11				34		70		71

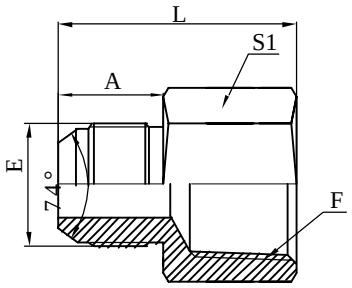

5JT

美制JIC外螺纹74°外锥/英锥管内螺纹
JIC MALE 74°CONE/BSPT FEMALE

代号 PART NO.	螺纹THREADE					尺 寸 DIMENSIONS				
	E	F				A		S1		L
5JT-04-02	U7/16"X20	ZG1/8"X28				14		17		29
5JT-04	U7/16"X20	ZG1/4"X19				14		19		32
5JT-06-04	U9/16"X18	ZG1/4"X19				14		19		32
5JT-06	U9/16"X18	ZG3/8"X19				14		22		34
5JT-08-06	U3/4"X16	ZG3/8"X19				16.7		22		37
5JT-08	U3/4"X16	ZG1/2"X14				16.7		30		43
5JT-10-08	U7/8"X14	ZG1/2"X14				19.5		30		36
5JT-12	U1.1/16"X12	ZG3/4"X14				22		36		52
5JT-16	U1.5/16"X12	ZG1"X11				23		41		57

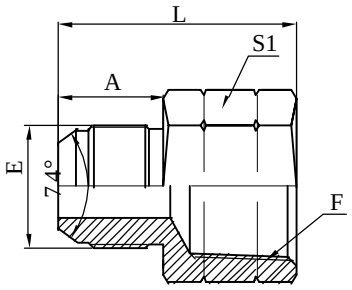

5JN

美制JIC外螺纹74°外锥/布锥管内螺纹
JIC MALE 74°CONE/NPT FEMALE

代号 PART NO.	螺纹THREADE E	F				尺 寸 DIMENSIONS A		S1		L
5JN-04-02	U7/16"X20	Z1/8"X27				14		17		29
5JN-04	U7/16"X20	Z1/4"X18				14		19		32
5JN-05-04	U1/2"X20	Z1/4"X18				14		19		32
5JN-06-04	U9/16"X18	Z1/4"X18				14		19		32
5JN-06	U9/16"X18	Z3/8"X18				14		22		34
5JN-06-08	U9/16"X18	Z1/2"X14				14		30		40
5JN-08-06	U3/4"X16	Z3/8"X18				16.7		22		37
5JN-08	U3/4"X16	Z1/2"X14				16.7		30		43
5JN-08-12	U3/4"X16	Z3/4"X14				16.7		36		47
5JN-10-08	U7/8"X14	Z1/2"X14				19.5		30		46
5JN-10-12	U7/8"X14	Z3/4"X14				19.5		36		50
5JN-12-08	U1.1/16"X12	Z1/2"X14				22		30		48
5JN-12	U1.1/16"X12	Z3/4"X14				22		36		52
5JN-16-12	U1.5/16"X12	Z3/4"X14				23		36		53
5JN-16	U1.5/16"X12	Z1"X11.5				23		41		57
5JN-20	U1.5/8"X12	Z1.1/4"X11.5				24.5		50		61
5JN-24	U1.7/8"X12	Z1.1/2"X11.5				27.5		60		65
5JN-32	U2.1/2"X12	Z2"X11.5				34		70		71

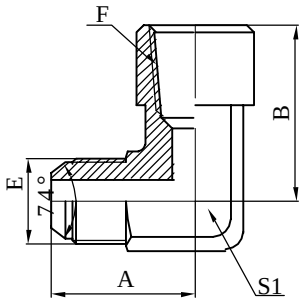

5JN9

90°美制JIC外螺纹74°外锥/布锥管内螺纹
90°JIC MALE 74°CONE/NPT FEMALE

代号 PART NO.	螺纹 THREADE					尺 寸 DIMENSIONS				
	E	F				A	B	S1		
5JN9-04-02	U7/16"X20	Z1/8"X27				27	21	17		
5JN9-04	U7/16"X20	Z1/4"X18				27	21	17		
5JN9-06-04	U9/16"X18	Z1/4"X18				32	27	22		
5JN9-06	U9/16"X18	Z3/8"X18				32	27	22		
5JN9-08-04	U3/4"X16	Z1/4"X18				35	30	27		
5JN9-08	U3/4"X16	Z1/2"X14				35	30	27		
5JN9-12-08	U1.1/16"X12	Z1/2"X14				35	30	27		
5JN9-12	U1.1/16"X12	Z3/4"X14				40	32	33		
5JN9-12-16	U1.1/16"X12	Z1"X11.5				38	49	41		
5JN9-16-12	U1.5/16"X12	Z3/4"X14				49	38	41		
5JN9-16	U1.5/16"X12	Z1"X11.5				49	38	41		

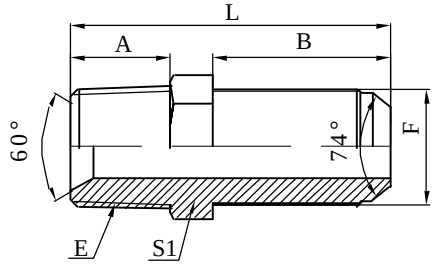

6NJ

美制NPT外螺纹/美制JIC外螺纹外锥过板接头
NPT MALE/JIC MALE 74°CONE BULKHEAD

代号 PART NO.	螺纹 THREADE					尺 寸 DIMENSIONS				
	E	F				A	B	S1	L	
6NJ-02-04	Z1/8"X27	U7/16"X20				10	32.5	14	48.5	
6NJ-04	Z1/4"X18	U7/16"X20				14	32.5	14	52.5	
6NJ-04-06	Z1/4"X18	U9/16"X18				14	32.5	17	52.5	
6NJ-06	Z3/8"X18	U9/16"X18				14	32.5	17	52.5	
6NJ-08	Z1/2"X14	U3/4"X16				19	36.5	22	64	
6NJ-08-10	Z1/2"X14	U7/8"X14				19	40	22	67	
6NJ-12	Z3/4"X14	U1.1/16"X12				19.5	44.5	27	73	
6NJ-16	Z1"X11.5	U1.5/16"X12				24	44.5	36	79.5	
6NJ-20	Z1.1/4"X11.5	U1.5/8"X12				25	45.7	46	84	
6NJ-24	Z1.1/2"X11.5	U1.7/8"X12				25	46	50	88	

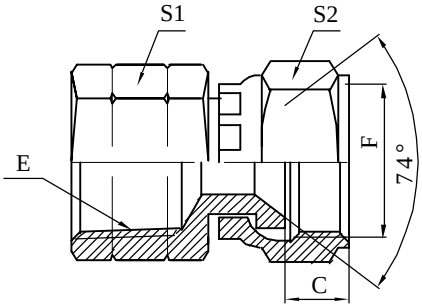

7NJ

布锥管内螺纹/JIC内螺纹74°内锥
NPT FEMALE/JIC FEMALE 74°SEAT

代号 PART NO.	螺纹 THREADE					尺 寸 DIMENSIONS				
	E	F				C		S1	S2	
7NJ-04	Z1/4"X18	U7/16"X20				8.5		19	17	
7NJ-04-06	Z1/4"X18	U9/16"X18				10		19	19	
7NJ-06	Z3/8"X18	U9/16"X18				10		24	19	
7NJ-06-08	Z3/8"X18	U3/4"X16				11		24	24	
7NJ-08	Z1/2"X14	U3/4"X16				11		30	24	
7NJ-08-10	Z1/2"X14	U7/8"X14				11		30	27	
7NJ-08-12	Z1/2"X14	U1.1/16"X12				13.5		30	32	
7NJ-12	Z3/4"X14	U1.1/16"X12				13.5		36	32	
7NJ-16	Z1"X11.5	U1.5/16"X12				14.5		41	41	
7NJ-20	Z1.1/4"X11.5	U1.5/8"X12				15.5		50	50	
7NJ-24	Z1.1/2"X11.5	U1.7/8"X12				18.5		60	55	

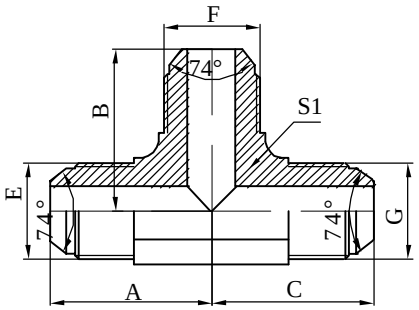

AJ

美制JIC外螺纹74°外锥三通
JIC MALE 74°CONE TEE

代号 PART NO.	螺纹 THREADE				尺 寸 DIMENSIONS				
	E	F	G		A	B	C	S1	
AJ-04	U7/16"X20	U7/16"X20	U7/16"X20		24	24	24	11	
AJ-04-06-04	U7/16"X20	U9/16"X18	U7/16"X20		27	27	27	14	
AJ-05	U1/2"X20	U1/2"X20	U1/2"X20		27	27	27	14	
AJ-06-04-06	U9/16"X18	U7/16"X20	U9/16"X18		27	27	27	14	
AJ-06	U9/16"X18	U9/16"X18	U9/16"X18		27	27	27	14	
AJ-08	U3/4"X16	U3/4"X16	U3/4"X16		30	30	30	19	
AJ-08-06-08	U3/4"X16	U9/16"X18	U3/4"X16		30	30	30	19	
AJ-10	U7/8"X14	U7/8"X14	U7/8"X14		33	33	33	22	
AJ-12	U1.1/16"X12	U1.1/16"X12	U1.1/16"X12		40	40	40	27	
AJ-16	U1.5/16"X12	U1.5/16"X12	U1.5/16"X12		49	49	49	33	
AJ-16-12-16	U1.5/16"X12	U1.1/16"X12	U1.5/16"X12		49	49	49	33	
AJ-20	U1.5/8"X12	U1.5/8"X12	U1.5/8"X12		57	57	57	44	

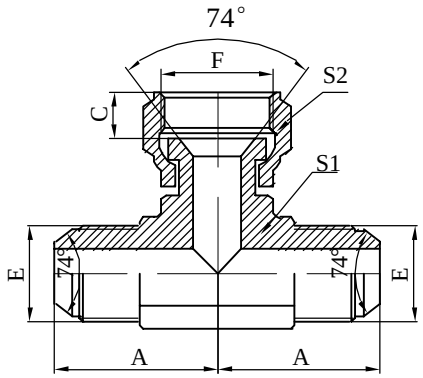

BJ

美制JIC外螺纹74°外锥/
美制JIC内螺纹74°内锥分支三通
JIC MALE 74° CONE/
JIC FEMALE BRANCH TEE

代号 PART NO.	螺纹 THREADE					尺 寸 DIMENSIONS				
	E	F				A	C	S1	S2	
BJ-04	U7/16"X20	U7/16"X20				24	8.5	11	17	
BJ-05	U1/2"X20	U1/2"X20				27	9.5	14	19	
BJ-06	U9/16"X18	U9/16"X18				27	10	14	19	
BJ-08	U3/4"X16	U3/4"X16				30	11	19	24	
BJ-10	U7/8"X14	U7/8"X14				33	11	22	27	
BJ-12	U1.1/16"X12	U1.1/16"X12				40	13.5	27	32	
BJ-16	U1.5/16"X12	U1.5/16"X12				49	14.5	33	41	
BJ-20	U1.5/8"X12	U1.5/8"X12				57	15.5	44	50	

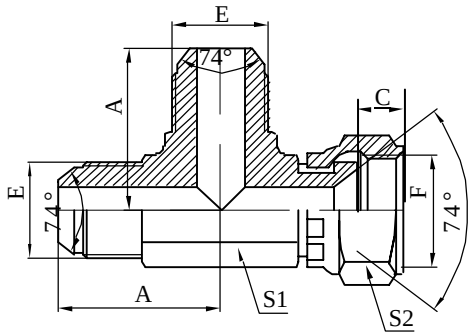

CJ

美制JIC外螺纹74°外锥/
美制JIC内螺纹74°内锥主支三通
JIC MALE 74 ° CONE/
JIC FEMALE 74°SEAT RUN TEE

代号 PART NO.	螺纹 THREADE					尺 寸 DIMENSIONS				
	E	F				A	C	S1	S2	
CJ-04	U7/16"X20	U7/16"X20				24	8.5	11	17	
CJ-05	U1/2"X20	U1/2"X20				27	9.5	14	19	
CJ-06	U9/16"X18	U9/16"X18				27	10	14	19	
CJ-08	U3/4"X16	U3/4"X16				30	11	19	24	
CJ-10	U7/8"X14	U7/8"X14				33	11	22	27	
CJ-12	U1.1/16"X12	U1.1/16"X12				40	13.5	27	32	
CJ-16	U1.5/16"X12	U1.5/16"X12				49	14.5	33	41	
CJ-20	U1.5/8"X12	U1.5/8"X12				57	15.5	44	50	

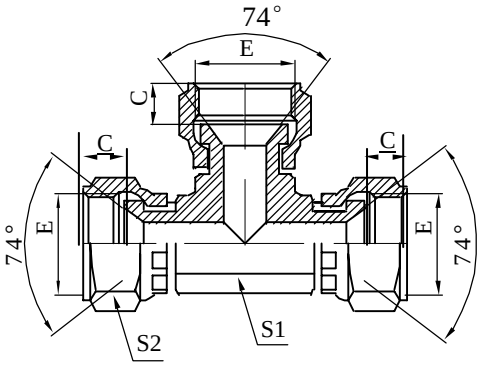

DJ

美制JIC内螺纹74°内锥三通
JIC FEMALE 74°SEAT TEE

代号 PART NO.	螺纹 THREADE					尺 寸 DIMENSIONS				
	E	F					C	S1	S2	
DJ-04	U7/16"X20	U7/16"X20					8.5	11	17	
DJ-05	U1/2"X20	U1/2"X20					9.5	11	19	
DJ-06	U9/16"X18	U9/16"X18					10	14	19	
DJ-08	U3/4"X16	U3/4"X16					11	19	24	
DJ-10	U7/8"X14	U7/8"X14					11	22	27	
DJ-12	U1.1/16"X12	U1.1/16"X12					13.5	27	32	
DJ-16	U1.5/16"X12	U1.5/16"X12					14.5	33	41	
DJ-20	U1.5/8"X12	U1.5/8"X12					15.5	44	50	

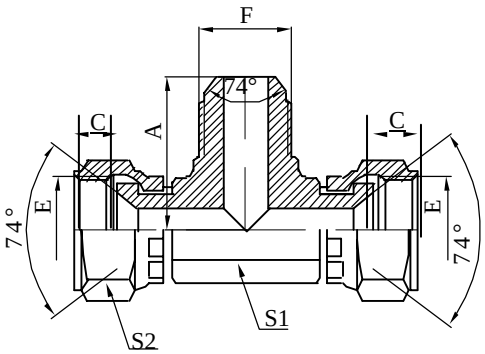

EJ

美制JIC内螺纹74°内锥/
美制JIC外螺纹74°外锥分支三通
JIC FEMALE 74 ° SEAT/
JIC MALE 74°CONE BRANCH TEE

代号 PART NO.	螺纹 THREADE					尺 寸 DIMENSIONS				
	E	F				A	C	S1	S2	
EJ-04	U7/16"X20	U7/16"X20				24	8.5	11	17	
EJ-05	U1/2"X20	U1/2"X20				27	9.5	14	19	
EJ-06	U9/16"X18	U9/16"X18				27	10	14	19	
EJ-08	U3/4"X16	U3/4"X16				30	11	19	24	
EJ-10	U7/8"X14	U7/8"X14				33	11	22	27	
EJ-12	U1.1/16"X12	U1.1/16"X12				40	13.5	27	32	
EJ-16	U1.5/16"X12	U1.5/16"X12				49	14.5	33	41	
EJ-20	U1.5/8"X12	U1.5/8"X12				57	15.5	44	50	

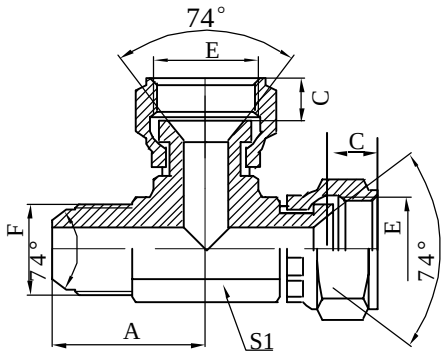

FJ

美制JIC内螺纹74°内锥/
美制JIC外螺纹74°外锥分支三通
JIC FEMALE 74° SEAT/
JIC MALE 74°CONE BRANCH TEE

代号 PART NO.	螺纹 THREADE					尺 寸 DIMENSIONS				
	E	F				A	C	S1	S2	
EJ-04	U7/16"X20	U7/16"X20				24	8.5	11	17	
EJ-05	U1/2"X20	U1/2"X20				27	9.5	14	19	
EJ-06	U9/16"X18	U9/16"X18				27	10	14	19	
EJ-08	U3/4"X16	U3/4"X16				30	11	19	24	
EJ-10	U7/8"X14	U7/8"X14				33	11	22	27	
EJ-12	U1.1/16"X12	U1.1/16"X12				40	13.5	27	32	
EJ-16	U1.5/16"X12	U1.5/16"X12				49	14.5	33	41	
EJ-20	U1.5/8"X12	U1.5/8"X12				57	15.5	44	50	

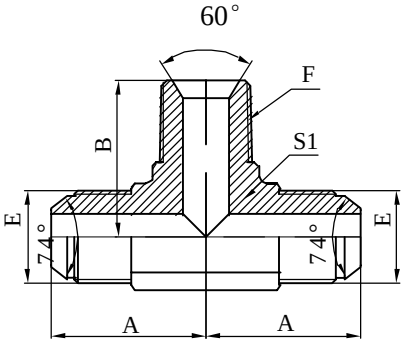

AJNJ

美制JIC外螺纹74°外锥/
布锥管外螺纹分支三通
JIC MALE 74°CONE/
NPT MALE BRANCH TEE

代号 PART NO.	螺纹 THREADE					尺 寸 DIMENSIONS				
	E	F				A	B	S1		
AJNJ-04	U7/16"X20	Z1/4"X18				27	27	14		
AJNJ-04-02-04	U7/16"X20	Z1/8"X27				24	24	11		
AJNJ-05-02-05	U1/2"X20	Z1/8"X27				27	27	14		
AJNJ-05-04-05	U1/2"X20	Z1/4"X18				27	27	14		
AJNJ-06	U9/16"X18	Z3/8"X18				28	28	17		
AJNJ-06-04-06	U9/16"X18	Z1/4"X18				27	27	14		
AJNJ-08	U3/4"X16	Z1/2"X14				33	33	22		
AJNJ-08-06-08	U3/4"X16	Z3/8"X18				30	30	19		
AJNJ-10-08-10	U7/8"X14	Z1/2"X14				33	33	22		
AJNJ-10-12-10	U7/8"X14	Z3/4"X14				40	40	27		
AJNJ-12	U1.1/16"X12	Z3/4"X14				40	40	27		
AJNJ-16	U1.5/16"X12	Z1"X11.5				49	49	33		
AJNJ-20	U1.5/8"X12	Z1.1/4"X11.5				57	57	44		

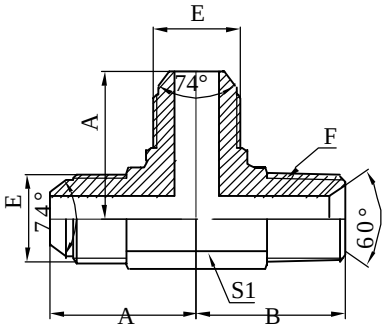

AJJN

美制JIC外螺纹74°外锥/
布锥管外螺纹主支三通
JIC MALE 74°CONE/
NPT MALE RUN TEE

代号 PART NO.	螺纹 THREADE					尺 寸 DIMENSIONS				
	E	F				A	B	S1		
AJJN-04	U7/16"X20	Z1/4"X18				27	27	14		
AJJN-04-04-02	U7/16"X20	Z1/8"X27				24	24	11		
AJJN-05-05-02	U1/2"X20	Z1/8"X27				27	27	14		
AJJN-05-05-04	U1/2"X20	Z1/4"X18				27	27	14		
AJJN-06	U9/16"X18	Z3/8"X18				28	28	17		
AJJN-06-06-04	U9/16"X18	Z1/4"X18				27	27	14		
AJJN-08	U3/4"X16	Z1/2"X14				33	33	22		
AJJN-08-08-06	U3/4"X16	Z3/8"X18				30	30	19		
AJJN-10-10-08	U7/8"X14	Z1/2"X14				33	33	22		
AJJN-10-10-12	U7/8"X14	Z3/4"X14				40	40	27		
AJJN-12	U1.1/16"X12	Z3/4"X14				40	40	27		
AJJN-16	U1.5/16"X12	Z1"X11.5				49	49	33		
AJJN-20	U1.5/8"X12	Z1.1/4"X11.5				57	57	44		

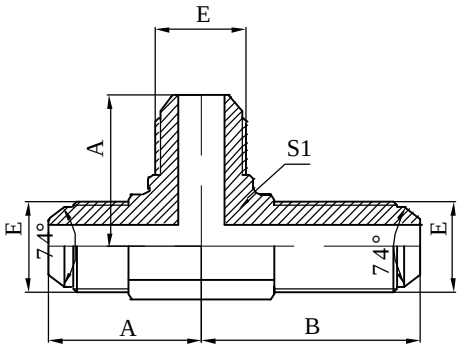

AJJ6J

美制JIC外螺纹74°外锥过板接头主支三通
JIC MALE 74°CONE BULKHEAD RUN TEE

代号 PART NO.	螺纹 THREADE					尺 寸 DIMENSIONS				
	E					A	B	S1		
AJJ6J-04	U7/16"X20					24	40.4	11		
AJJ6J-06	U9/16"X18					27	46	14		
AJJ6J-08	U3/4"X16					30	53.5	19		
AJJ6J-10	U7/8"X14					33	60.7	22		
AJJ6J-12	U1.1/16"X12					40	67.8	27		
AJJ6J-16	U1.5/16"X12					49	71	33		
AJJ6J-20	U1.5/8"X12					57	79.2	44		

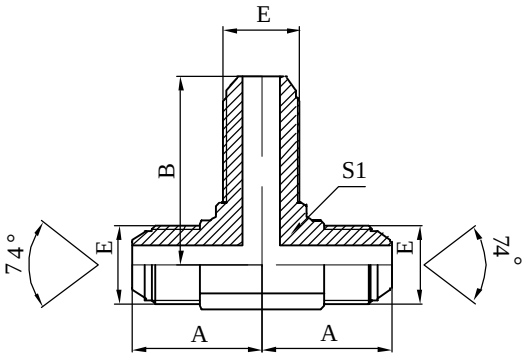

AJ6JJ

美制JIC外螺纹74°外锥过板接头分支三通
JIC MALE 74°CONE BULKHEAD BRANCH TEE

代号 PART NO.	螺纹 THREADE					尺 寸 DIMENSIONS				
	E					A	B	S1		
AJ6JJ-04	U7/16"X20					24	40.4	11		
AJ6JJ-06	U9/16"X18					27	46	14		
AJ6JJ-08	U3/4"X16					30	53.5	19		
AJ6JJ-10	U7/8"X14					33	60.7	22		
AJ6JJ-12	U1.1/16"X12					40	67.8	27		
AJ6JJ-16	U1.5/16"X12					49	71	33		

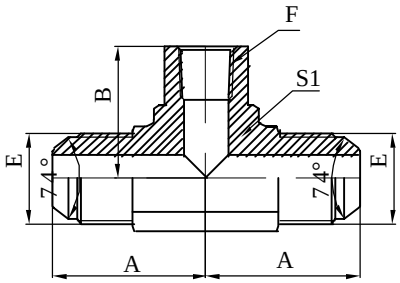

KJNJ

美制JIC外螺纹74°外锥/
布锥管内螺纹分支三通
JIC MALE 74°CONE/
NPT FEMALE BRANCH TEE

代号 PART NO.	螺纹 THREADE					尺 寸 DIMENSIONS				
	E	F				A	B	S1		
KJNJ-04	U7/16"X20	Z1/4"X18				30	22.4	19		
KJNJ-04-02-04	U7/16"X20	Z1/8"X27				28	16.8	17		
KJNJ-05-02-05	U1/2"X20	Z1/8"X27				28	16.8	17		
KJNJ-05-04-05	U1/2"X20	Z1/4"X18				30	22.4	19		
KJNJ-06	U9/16"X18	Z3/8"X18				33	25.9	22		
KJNJ-06-04-06	U9/16"X18	Z1/4"X18				30	22.4	19		
KJNJ-08	U3/4"X16	Z1/2"X14				40	31.2	27		
KJNJ-08-06-08	U3/4"X16	Z3/8"X18				40	25.9	27		
KJNJ-10-08-10	U7/8"X14	Z1/2"X14				40	31.2	27		
KJNJ-12	U1.1/16"X12	Z3/4"X14				49	34.5	33		
KJNJ-16	U1.5/16"X12	Z1"X11.5				57	41.1	44		

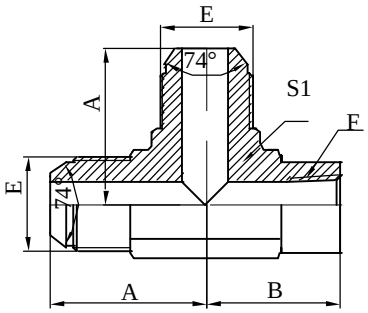

LJJN

美制JIC外螺纹74°外锥/
布锥管内螺纹主支三通
JIC MALE 74°CONE/
NPT FEMALE RUN TEE

代号 PART NO.	螺纹 THREADE					尺 寸 DIMENSIONS				
	E	F				A	B	S1		
LJJN-04	U7/16"X20	Z1/4"X18				30	25.1	19		
LJJN-04-04-02	U7/16"X20	Z1/8"X27				28	16.8	17		
LJJN-06	U9/16"X18	Z3/8"X18				33	26.8	22		
LJJN-06-06-04	U9/16"X18	Z1/4"X18				30	22.5	19		
LJJN-08	U3/4"X16	Z1/2"X14				40	33	27		
LJJN-08-08-06	U3/4"X16	Z3/8"X18				40	25.9	27		
LJJN-10-10-08	U7/8"X14	Z1/2"X14				40	31.2	27		
LJJN-12	U1.1/16"X12	Z3/4"X14				49	39	33		
LJJN-16	U1.5/16"X12	Z1"X11.5				57	43.9	27		
LJJN-20	U1.5/8"X12	Z1.1/4"X11.5				57	43.3	44		

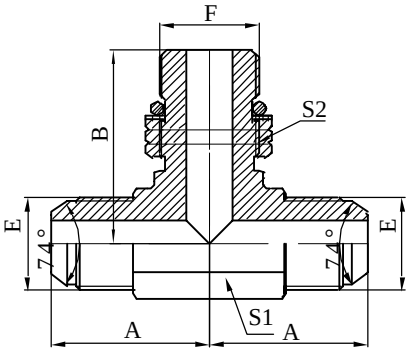

AJOJ-OG

美制JIC外螺纹74°外锥/
SAE外螺纹带O型圈分支三通
JIC MALE 74°CONE/
SAE O-RING BOSS BRANCH TEE

代号 PART NO.	螺纹 THREADE					尺 寸 DIMENSIONS				
	E	F				A	B	S1	S2	
AJOJ-04OG	U7/16"X20	U7/16"X20				24	27.2	11	17	
AJOJ-05OG	U1/2"X20	U1/2"X20				27	29	14	17	
AJOJ-05-04-05OG	U1/2"X20	U7/16"X20				27	30	14	17	
AJOJ-06OG	U9/16"X18	U9/16"X18				27	31.8	14	19	
AJOJ-06-04-06OG	U9/16"X18	U7/16"X20				27	30	14	17	
AJOJ-06-05-06OG	U9/16"X18	U1/2"X20				27	30	14	17	
AJOJ-08OG	U3/4"X16	U3/4"X16				30	36.8	19	24	
AJOJ-08-06-08OG	U3/4"X16	U9/16"X18				30	33.5	19	19	
AJOJ-10OG	U7/8"X14	U7/8"X14				33	44	22	27	
AJOJ-10-08-10OG	U7/8"X14	U3/4"X16				33	40	22	24	
AJOJ-12OG	U1.1/16"X12	U1.1/16"X12				33	51	24	32	
AJOJ-12-08-12OG	U1.1/16"X12	U3/4"X16				33	44	24	24	
AJOJ-12-10-12OG	U1.1/16"X12	U7/8"X14				33	49	24	27	
AJOJ-16OG	U1.5/16"X12	U1.5/16"X12				49	54.5	33	41	
AJOJ-20-16-20OG	U1.5/8"X12	U1.5/16"X12				57	59.5	44	41	
AJOJ-20OG	U1.5/8"X12	U1.5/8"X12				57	59	44	50	

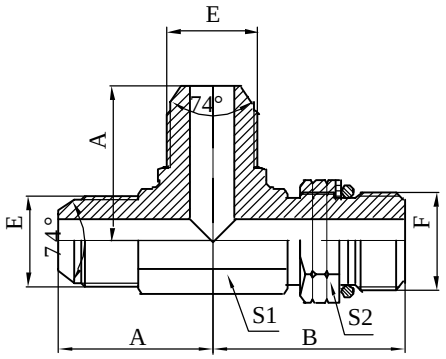

AJJO-OG

美制JIC外螺纹74°外锥/
SAE外螺纹带O型圈主支三通
JIC MALE 74°CONE/
SAE O-RING BOSS RUN TEE

代号 PART NO.	螺纹 THREADE					尺 寸 DIMENSIONS				
	E	F				A	B	S1	S2	
AJJO-04OG	U7/16"X20	U7/16"X20				24	27.2	11	17	
AJJO-05OG	U1/2"X20	U1/2"X20				27	29	14	17	
AJJO-05-05-04OG	U1/2"X20	U7/16"X20				27	30	14	17	
AJJO-06OG	U9/16"X18	U9/16"X18				27	31.8	14	19	
AJJO-06-06-04OG	U9/16"X18	U7/16"X20				27	30.1	14	17	
AJJO-06-06-05OG	U9/16"X18	U1/2"X20				27	30	14	17	
AJJO-06-06-08OG	U9/16"X18	U3/4"X16				30	37.5	19	24	
AJJO-08OG	U3/4"X16	U3/4"X16				30	36.8	19	24	
AJJO-08-08-06OG	U3/4"X16	U9/16"X18				30	33.5	19	19	
AJJO-08-08-10OG	U3/4"X16	U7/8"X14				33	44	22	27	
AJJO-10OG	U7/8"X14	U7/8"X14				33	44	22	27	
AJJO-10-10-08OG	U7/8"X14	U3/4"X16				33	39.5	22	24	
AJJO-12OG	U1.1/16"X12	U1.1/16"X12				33	51	24	32	
AJJO-12-12-08OG	U1.1/16"X12	U3/4"X16				33	43	24	24	
AJJO-12-12-10OG	U1.1/16"X12	U7/8"X14				33	49	24	27	
AJJO-16OG	U1.5/16"X12	U1.5/16"X12				49	54.5	33	41	
AJJO-20OG	U1.5/8"X12	U1.5/8"X12				57	59	44	50	

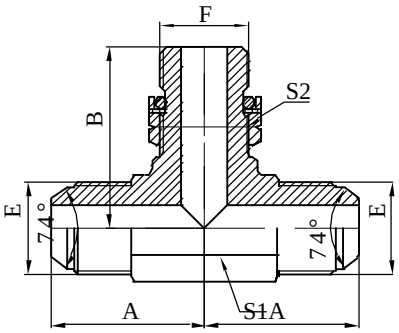

AJGJ-OG

JIC外螺纹74°外锥/
英管外螺纹O型圈分支三通
JIC MALE 74 °CONE/
BSP MALE O-RING BRANCH TEE

代号 PART NO.	螺纹 THREADE					尺 寸 DIMENSIONS				
	E	F				A	B	S1	S2	
AJGJ-04-02-04OG	U7/16"X20	G1/8"X28				24	26.2	11	14	
AJGJ-04OG	U7/16"X20	G1/4"X19				27	31.8	14	19	
AJGJ-05-02-05OG	U1/2"X20	G1/8"X28				27	29	14	19	
AJGJ-05-04-05OG	U1/2"X20	G1/4"X19				27	31.8	14	19	
AJGJ-06-04-06OG	U9/16"X18	G1/4"X19				27	31	14	19	
AJGJ-06OG	U9/16"X18	G3/8"X19				28	36.8	17	22	
AJGJ-08-06-08OG	U3/4"X16	G3/8"X19				30	37	19	22	
AJGJ-08OG	U3/4"X16	G1/2"X14				33	43.2	22	27	
AJGJ-10-08-10OG	U7/8"X16	G1/2"X14				33	43.5	22	27	
AJGJ-12OG	U1.1/16"X12	G3/4"X14				33	51	24	32	
AJGJ-16OG	U1.5/16"X12	G1"X11				49	53	33	41	

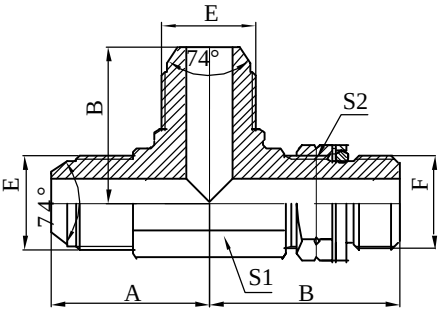

AJJG-OG

JIC外螺纹74°外锥/
英管外螺纹O型圈主支三通
JIC MALE 74 °CONE/
BSP MALE O-RING RUN TEE

代号 PART NO.	螺纹 THREADE					尺 寸 DIMENSIONS				
	E	F				A	B	S1	S2	
AJJG-04OG	U7/16"X20	G1/4"X19				27	31.9	14	19	
AJJG-05-05-04OG	U1/2"X20	G1/4"X19				27	31.3	14	19	
AJJG-06OG	U9/16"X18	G3/8"X19				28	36.8	17	22	
AJJG-06-06-04OG	U9/16"X18	G1/4"X19				27	31.3	14	19	
AJJG-08-08-06OG	U3/4"X16	G3/8"X19				30	36.8	19	22	
AJJG-08OG	U3/4"X16	G1/2"X14				33	43.2	22	27	
AJJG-10-10-08OG	U7/8"X16	G1/2"X14				33	44	22	27	
AJJG-12OG	U1.1/16"X12	G3/4"X14				33	49.5	24	32	
AJJG-16OG	U1.5/16"X12	G1"X11				49	53	33	41	

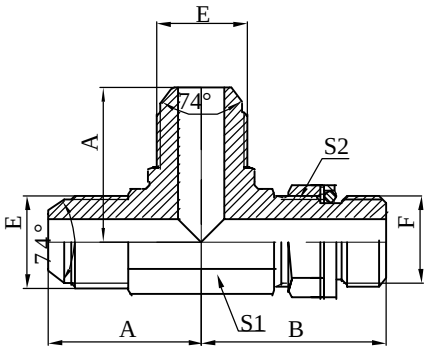

AJJH-OG

美制JIC外螺纹74°外锥/
公制外螺纹可调向柱端主支三通
JIC MALE 74°CONE/METRIC MALE
ADJUSTABLE STUD END

代号 PART NO.	螺纹 THREADE					尺 寸 DIMENSIONS				
	E	F				A	B	S1	S2	
AJJH-04-04-10OG	U7/16"X20	M10x1				24	26.5	11	14	
AJJH-04-04-12OG	U7/16"X20	M12x1.5				27	32.5	14	17	
AJJH-05-05-12OG	U1/2"X20	M12x1.5				27	32	14	17	
AJJH-05-05-14OG	U1/2"X20	M14x1.5				27	32	14	19	
AJJH-06-06-14OG	U9/16"X18	M14x1.5				27	32	14	19	
AJJH-06-06-16OG	U9/16"X18	M16x1.5				28	34.8	17	22	
AJJH-08-08-16OG	U3/4"X16	M16x1.5				30	36	19	22	
AJJH-08-08-18OG	U3/4"X16	M18x1.5				30	37	19	24	
AJJH-10-10-18OG	U7/8"X14	M18x1.5				33	39.5	22	24	
AJJH-10-10-22OG	U7/8"X14	M22x1.5				33	40.2	22	27	
AJJH-12-12-22OG	U1.1/16"X12	M22x1.5				33	44	24	27	
AJJH-12-12-27OG	U1.1/16"X12	M27x2				40	48.5	27	32	
AJJH-16-16-27OG	U1.5/16"X12	M27x2				49	52	33	32	

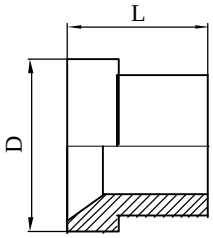

NB500

JIC公制管衬套
JIC METRIC SLEEVE

代号 PART NO.	螺纹 THREADE		管子外径 TUBE O.D. mm			尺 寸 DIMENSIONS D		L		
NB500-06	U7/16"X20		6			9.7		10.4		
NB500-08	U1/2"X20		8			11.3		11.2		
NB500-10	U9/16"X18		10			12.7		12.7		
NB500-12	U3/4"X16		12			17.3		14.2		
NB500-14	U7/8"X16		14			20.2		16.8		
NB500-15	U7/8"X16		15			20.2		16.8		
NB500-16	U7/8"X16		16			20.2		16.8		
NB500-18	U1.1/16"X12		18			24.7		17.3		
NB500-20A	U1.1/16"X12		20			24.7		17.3		
NB500-20	U1.3/16"X12		20			27.8		19.3		
NB500-22	U1.3/16"X12		22			27.8		19.3		
NB500-25	U1.5/16"X12		25			31		19.8		
NB500-28	U1.5/8"X12		28			38.9		23.1		
NB500-30	U1.5/8"X12		30			38.9		23.1		
NB500-32	U1.5/8"X12		32			38.9		23.1		
NB500-35	U1.7/8"X12		35			45.3		28.4		
NB500-38	U1.7/8"X12		38			45.3		28.4		
NB500-50	U2.1/2"X12		50			61.2		30.2		

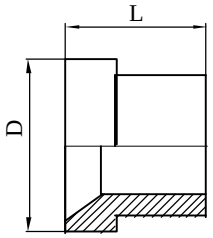

NB300

JIC英制管衬套
JIC INCH SLEEVE

代号 PART NO.	螺纹 THREADE		管子外径 TUBE O.D.			尺 寸 DIMENSIONS				
			in			D		L		
NB300-04	U7/16"X20		1/4"			9.5		10.5		
NB300-06	U9/16"X18		3/8"			12.5		13		
NB300-08	U3/4"X16		1/2"			17		14		
NB300-10	U7/8"X16		5/8"			20		17		
NB300-12	U1.1/16"X12		3/4"			24.5		17.5		
NB300-16	U1.5/16"X12		1"			31		20		
NB300-20	U1.5/8"X12		1.1/4"			39		23.5		

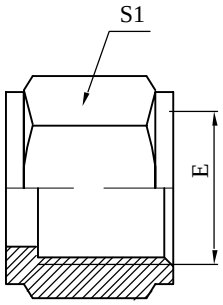

00TSUM-NB

美制JIC扩口管接头螺母
JIC FLARE TUBE END NUT

代号 PART NO.	螺纹 THREADE					尺 寸 DIMENSIONS				
	E					S1				
00TSUM-04NB	U7/16"X20					17				
00TSUM-06NB	U9/16"X18					19				
00TSUM-08NB	U3/4"X16					24				
00TSUM-10NB	U7/8"X16					27				
00TSUM-12NB	U1.1/16"X12					32				
00TSUM-16NB	U1.5/16"X12					38				
00TSUM-20NB	U1.5/8"X12					50				
00TSUM-24NB	U1.7/8"X12					55				

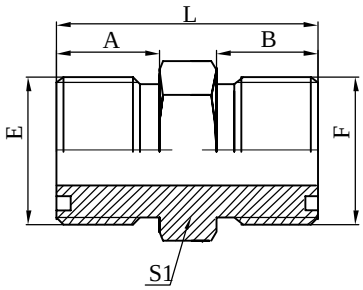

1F

美制ORFS外螺纹O型圈平面密封
ORFS MALE O-RING

代号 PART NO.	螺纹 THREADE					尺 寸 DIMENSIONS				
	E	F				A	B	S1		L
1F-04	U9/16"X18	U9/16"X18				12	12	17		30
1F-04-06	U9/16"X18	U11/16"X16				12	14	19		32
1F-04-08	U9/16"X18	U13/16"X16				12	15	22		36
1F-06	U11/16"X16	U11/16"X16				14	14	19		34
1F-06-08	U11/16"X16	U13/16"X16				14	15	22		38
1F-06-10	U11/16"X16	U1"X14				14	16.5	27		39.5
1F-08	U13/16"X16	U13/16"X16				15	15	22		39
1F-08-10	U13/16"X16	U1"X14				15	16.5	27		40.5
1F-08-12	U13/16"X16	U1.3/16"X12				15	17	32		41
1F-10	U1"X14	U1"X14				16.5	16.5	27		42
1F-10-12	U1"X14	U1.3/16"X12				16.5	17	32		42.5
1F-12	U1.3/16"X12	U1.3/16"X12				17	17	32		43
1F-12-16	U1.3/16"X12	U1.7/16"X12				17	18.5	41		47.5
1F-12-20	U1.3/16"X12	U1.11/16"X12				17	19.5	46		50
1F-16	U1.7/16"X12	U1.7/16"X12				18.5	18.5	41		49
1F-16-20	U1.7/16"X12	U1.11/16"X12				18.5	19.5	46		51.5
1F-20	U1.11/16"X12	U1.11/16"X12				19.5	19.5	46		52.5
1F-24	U2"X12	U2"X12				23.5	23.5	55		64

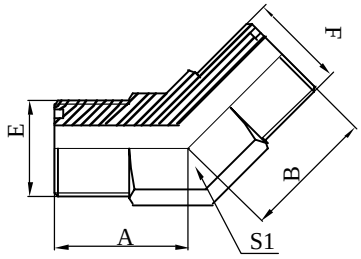

1F4

45°美制ORFS外螺纹O型圈平面密封
45°ORFS MALE O-RING

代号 PART NO.	螺纹 THREADE					尺 寸 DIMENSIONS				
	E	F				A	B	S1		
1F4-04	U9/16"X18	U9/16"X18				22	22	14		
1F4-04-06	U9/16"X18	U11/16"X16				25	25	19		
1F4-06	U11/16"X16	U11/16"X16				25	25	19		
1F4-06-08	U11/16"X16	U13/16"X16				27	27	22		
1F4-08	U13/16"X16	U13/16"X16				27	27	22		
1F4-08-12	U13/16"X16	U1.3/16"X12				37	37	33		
1F4-10	U1"X14	U1"X14				33	33	27		
1F4-12	U1.3/16"X12	U1.3/16"X12				37	37	33		
1F4-16	U1.7/16"X12	U1.7/16"X12				40	40	44		
1F4-20	U1.11/16"X12	U1.11/16"X12				40	40	44		
1F4-24	U2"X12	U2"X12				47	47	53		

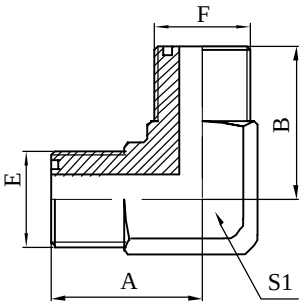

1F9

90°美制ORFS外螺纹O型圈平面密封
90°ORFS MALE O-RING

代号 PART NO.	螺纹 THREADE					尺 寸 DIMENSIONS				
	E	F				A	B	S1		
1F9-04	U9/16"X18	U9/16"X18				29	27	14		
1F9-04-06	U9/16"X18	U11/16"X16				30	29	17		
1F9-06	U11/16"X16	U11/16"X16				30	29	17		
1F9-06-08	U11/16"X16	U13/16"X16				37	37	22		
1F9-08	U13/16"X16	U13/16"X16				37	37	22		
1F9-08-12	U13/16"X16	U1.3/16"X12				40	52	27		
1F9-10	U1"X14	U1"X14				40	43	27		
1F9-12	U1.3/16"X12	U1.3/16"X12				40	47	27		
1F9-16	U1.7/16"X12	U1.7/16"X12				45	55	33		
1F9-20	U1.11/16"X12	U1.11/16"X12				57	55	44		
1F9-24	U2"X12	U2"X12				57	57	48		

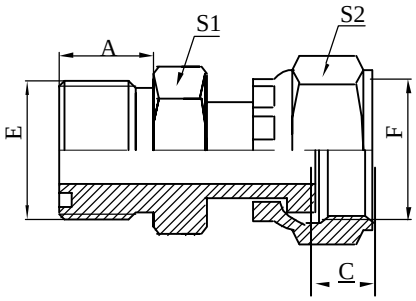

2F

美制ORFS外螺纹O型圈平面密封/ORFS内螺纹
ORFS MALE O-RING/ORFS FEMALE

代号 PART NO.	螺纹 THREADE					尺 寸 DIMENSIONS				
	E	F				A	C	S1	S2	
2F-04	U9/16"X18	U9/16"X18				12	10	17	19	
2F-04-06	U9/16"X18	U11/16"X16				12	11	17	22	
2F-04-08	U9/16"X18	U13/16"X16				12	12	19	24	
2F-06-04	U11/16"X16	U11/16"X16				14	10	19	19	
2F-06	U11/16"X16	U11/16"X16				14	11	19	22	
2F-06-08	U11/16"X16	U13/16"X16				14	12	19	24	
2F-06-10	U11/16"X16	U1"X14				14	13.5	24	32	
2F-08-06	U13/16"X16	U11/16"X16				15	11	22	22	
2F-08	U13/16"X16	U13/16"X16				15	12	22	24	
2F-08-10	U13/16"X16	U1"X14				15	13.5	24	32	
2F-08-12	U13/16"X16	U1.3/16"X12				15	13.5	30	36	
2F-10-08	U1"X14	U13/16"X16				16.5	12	27	24	
2F-10	U1"X14	U1"X14				16.5	13.5	27	32	
2F-10-12	U1"X14	U1.3/16"X12				16.5	13.5	30	36	
2F-10-16	U1"X14	U1.7/16"X12				16.5	14.5	36	41	
2F-12-08	U1.3/16"X12	U13/16"X16				17	12	32	24	
2F-12-10	U1.3/16"X12	U1"X14				17	13.5	32	32	
2F-12	U1.3/16"X12	U1.3/16"X12				17	13.5	32	36	
2F-12-16	U1.3/16"X12	U1.7/16"X12				17	14.5	36	41	
2F-16-12	U1.7/16"X12	U1.3/16"X12				18.5	13.5	41	36	
2F-16	U1.7/16"X12	U1.7/16"X12				18.5	14.5	41	41	
2F-16-20	U1.7/16"X12	U1.11/16"X12				18.5	15.5	41	50	
2F-20-16	U1.11/16"X12	U1.7/16"X12				19.5	14.5	46	41	
2F-20	U1.11/16"X12	U1.11/16"X12				19.5	15.5	46	50	

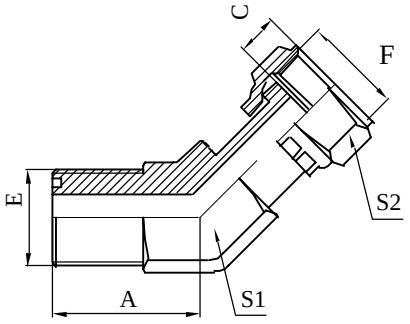

2F4

45°美制ORFS外螺纹O型
圈平面密封/ORFS内螺纹
45°ORFS MALE
O-RING/ORFS FEMALE

代号 PART NO.	螺纹 THREADE					尺 寸 DIMENSIONS				
	E	F				A	C	S1	S2	
2F4-04	U9/16"X18	U9/16"X18				22	10	14	19	
2F4-06	U11/16"X16	U11/16"X16				22	11	17	22	
2F4-08	U13/16"X16	U13/16"X16				27	12	22	24	
2F4-10	U1"X14	U1"X14				33	13.5	27	32	
2F4-12	U1.3/16"X12	U1.3/16"X12				37	13.5	33	36	
2F4-16	U1.7/16"X12	U1.7/16"X12				40	14.5	44	41	
2F4-20	U1.11/16"X12	U1.11/16"X12				40	15.5	44	50	

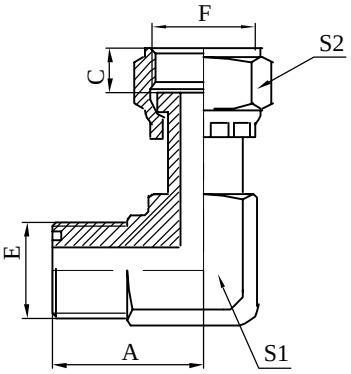

2F9

90°美制ORFS外螺纹O型
圈平面密封/ORFS内螺纹
90°ORFS MALE
O-RING/ORFS FEMALE

代号 PART NO.	螺纹 THREADE					尺 寸 DIMENSIONS				
	E	F				A	C	S1	S2	
2F9-04	U9/16"X18	U9/16"X18				29	10	14	19	
2F9-06	U11/16"X16	U11/16"X16				30	11	17	22	
2F9-08	U13/16"X16	U13/16"X16				37	12	22	24	
2F9-10	U1"X14	U1"X14				40	13.5	27	32	
2F9-12	U1.3/16"X12	U1.3/16"X12				40	13.5	27	36	
2F9-16	U1.7/16"X12	U1.7/16"X12				45	14.5	33	41	
2F9-20	U1.11/16"X12	U1.11/16"X12				57	15.5	44	50	

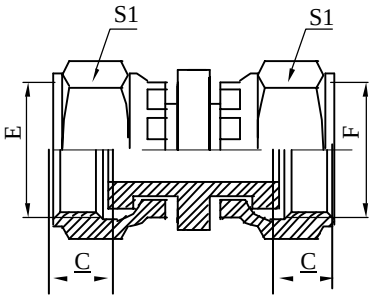

3F

美制ORFS内螺纹
ORFS FEMALE

代号 PART NO.	螺纹 THREADE					尺 寸 DIMENSIONS				
	E	F				C		S1		
3F-04	U9/16"X18	U9/16"X18				10		19		
3F-06	U11/16"X16	U11/16"X16				11		22		
3F-08	U13/16"X16	U13/16"X16				12		24		
3F-10	U1"X14	U1"X14				13.5		32		
3F-12	U1.3/16"X12	U1.3/16"X12				13.5		36		
3F-16	U1.7/16"X12	U1.7/16"X12				14.5		41		
3F-20	U1.11/16"X12	U1.11/16"X12				15.5		50		

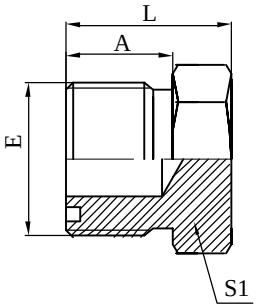

4F

美制ORFS外螺纹O型圈平面密封堵头
ORFS MALE O-RING PLUG

代号 PART NO.	螺纹 THREADE					尺 寸 DIMENSIONS				
	E					A		S1		L
4F-04	U9/16"X18					12		19		18
4F-06	U11/16"X16					14		22		22
4F-08	U13/16"X16					15		27		24
4F-10	U1"X14					16.5		30		26
4F-12	U1.3/16"X12					17		36		27
4F-16	U1.7/16"X12					18.5		41		30
4F-20	U1.11/16"X12					19.5		50		36

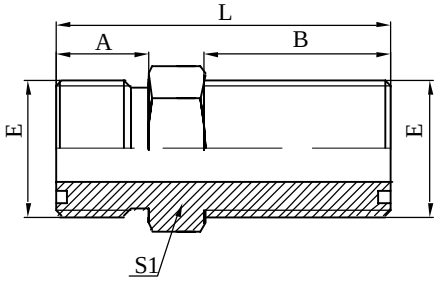

6F

美制ORFS外螺纹O型圈平面密封过板接头
ORFS MALE O-RING BULKHEAD

代号 PART NO.	螺纹 THREADE					尺 寸 DIMENSIONS				
	E					A	B	S1		L
6F-04	U9/16"X18					12	31.5	19		49.5
6F-06	U11/16"X16					14	34	22		56
6F-08	U13/16"X16					15	36.5	27		61
6F-10	U1"X14					16.5	40.6	30		67
6F-12	U1.3/16"X12					17	41.7	36		70
6F-16	U1.7/16"X12					18.5	42.2	41		72
6F-20	U1.11/16"X12					19.5	42.2	50		79

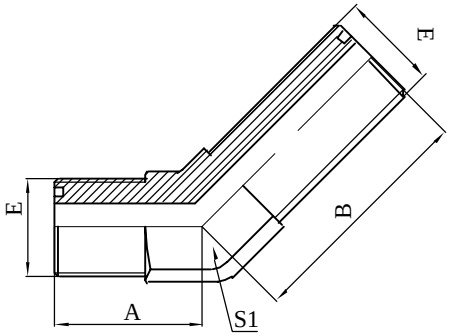

6F4

45°美制ORFS外螺纹O型圈平面密封过板接头
45°ORFS MALE O-RING BULKHEAD

代号 PART NO.	螺纹 THREADE					尺 寸 DIMENSIONS				
	E					A	B	S1		
6F4-04	U9/16"X18					22	42.4	14		
6F4-06	U11/16"X16					22	48.5	17		
6F4-08	U13/16"X16					27	51	22		
6F4-10	U1"X14					33	56.6	27		
6F4-12	U1.3/16"X12					37	60.7	33		
6F4-16	U1.7/16"X12					40	65.2	44		

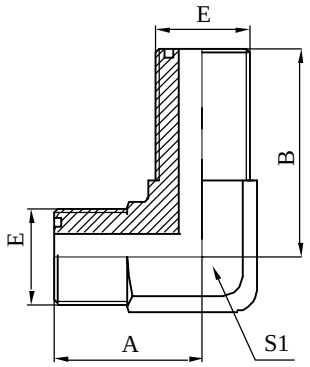

6F9

90°美制ORFS外螺纹O型圈平面密封过板接头
90°ORFS MALE O-RING BULKHEAD

代号 PART NO.	螺纹 THREADE					尺 寸 DIMENSIONS				
	E					A	B	S1		
6F9-04	U9/16"X18					29	47	14		
6F9-06	U11/16"X16					30	52	17		
6F9-08	U13/16"X16					37	55.5	22		
6F9-10	U1"X14					40	63	27		
6F9-12	U1.3/16"X12					40	67.2	27		
6F9-16	U1.7/16"X12					45	71.2	33		

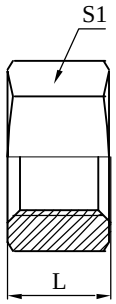

8F

美制ORFS锁母
ORFS LOCK NUT

代号 PART NO.	螺纹 THREADE					尺 寸 DIMENSIONS				
	E					A		S1		
8F-04	U9/16"X18					7		19		
8F-06	U11/16"X16					8		22		
8F-08	U13/16"X16					9		27		
8F-10	U1"X14					10.4		30		
8F-12	U1.3/16"X12					10.4		36		
8F-16	U1.7/16"X12					10.4		41		
8F-20	U1.11/16"X12					10.4		50		
8F-24	U2"X12					10.4		60		

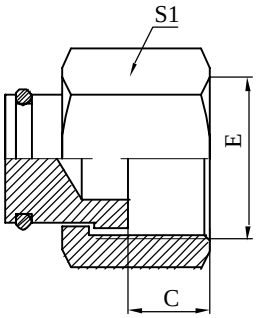

9F

美制ORFS内螺纹堵头
ORFS FEMALE PLUG

代号 PART NO.	螺纹 THREADE					尺 寸 DIMENSIONS				
	E					C		S1		
9F-04	U9/16"X18					11		19		
9F-06	U11/16"X16					10		22		
9F-08	U13/16"X16					11		27		
9F-10	U1"X14					13.5		30		
9F-12	U1.3/16"X12					13		36		
9F-16	U1.7/16"X12					15		41		
9F-20	U1.11/16"X12					17.5		50		

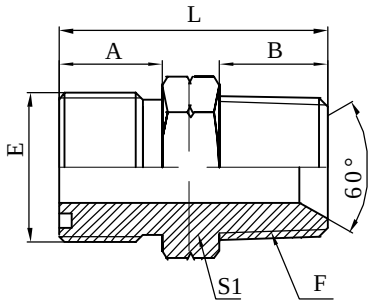

1FN

美制ORFS外螺纹O型圈平面密封/
布锥管外螺纹
ORFS MALE O-RING/
NPT MALE

代号 PART NO.	螺纹 THREADE					尺 寸 DIMENSIONS				
	E	F				A	B	S1	L	
1FN-04-02	U9/16"X18	Z1/8"X27				10	10	17	26	
1FN-04	U9/16"X18	Z1/4"X18				10	14	17	30	
1FN-04-06	U9/16"X18	Z3/8"X18				10	14	17	30	
1FN-06-04	U11/16"X16	Z1/4"X18				11	14	19	31	
1FN-06	U11/16"X16	Z3/8"X18				11	14	19	31	
1FN-06-08	U11/16"X16	Z1/2"X14				11	19	22	38	
1FN-08-04	U13/16"X16	Z1/4"X18				12	14	22	34	
1FN-08-06	U13/16"X16	Z3/8"X18				12	14	22	34	
1FN-08	U13/16"X16	Z1/2"X14				12	19	22	39	
1FN-08-12	U13/16"X16	Z3/4"X14				12	19.5	27	40	
1FN-10-08	U1"X14	Z1/2"X14				13.5	19	27	41	
1FN-10-12	U1"X14	Z3/4"X14				13.5	19.5	27	42	
1FN-12-08	U1.3/16"X12	Z1/2"X14				13.5	19	32	41	
1FN-12	U1.3/16"X12	Z3/4"X14				13.5	19.5	32	42	
1FN-12-16	U1.3/16"X12	Z1"X11.5				13.5	24	36	48	
1FN-16-12	U1.7/16"X12	Z3/4"X14				14.5	19.5	41	46	
1FN-16	U1.7/16"X12	Z1"X11.5				14.5	24	41	51	
1FN-16-20	U1.7/16"X12	Z1.1/4"X11.5				14.5	25	46	53	
1FN-20-16	U1.11/16"X12	Z1"X11.5				15.5	24	46	53	
1FN-20	U1.11/16"X12	Z1.1/4"X11.5				15.5	25	46	54	
1FN-20-24	U1.11/16"X12	Z1.1/2"X11.5				15.5	25	50	57	

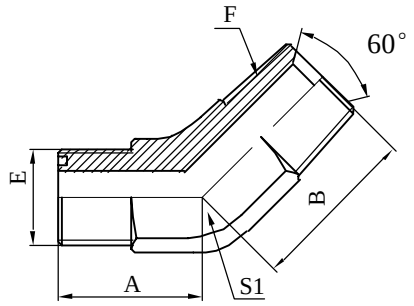

1FN4

45°美制ORFS外螺纹O型圈平面密封/
布锥管外螺纹
45 °ORFS MALE O-RING/
NPT MALE

代号 PART NO.	螺纹 THREADE					尺 寸 DIMENSIONS				
	E	F				A	B	S1		
1FN4-04-02	U9/16"X18	Z1/8"X27				22	22	14		
1FN4-04	U9/16"X18	Z1/4"X18				22	22	14		
1FN4-04-06	U9/16"X18	Z3/8"X18				22	22	17		
1FN4-06-04	U11/16"X16	Z1/4"X18				25	25	19		
1FN4-06	U11/16"X16	Z3/8"X18				25	25	19		
1FN4-06-08	U11/16"X16	Z1/2"X14				27	27	22		
1FN4-08-06	U13/16"X16	Z3/8"X18				27	27	22		
1FN4-08	U13/16"X16	Z1/2"X14				27	27	22		
1FN4-10-08	U1"X14	Z1/2"X14				33	33	27		
1FN4-12	U1.3/16"X12	Z3/4"X14				37	37	33		
1FN4-16	U1.7/16"X12	Z1"X11.5				40	40	44		
1FN4-20	U1.11/16"X12	Z1.1/4"X11.5				40	40	44		

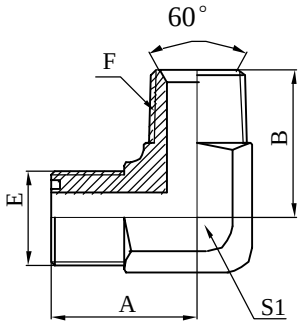

1FN9

90°美制ORFS外螺纹O型圈平面密封/
布锥管外螺纹
90 °ORFS MALE O-RING/
NPT MALE

代号 PART NO.	螺纹 THREADE					尺 寸 DIMENSIONS				
	E	F				A	B	S1		
1FN9-04-02	U9/16"X18	Z1/8"X27				29	27	14		
1FN9-04	U9/16"X18	Z1/4"X18				29	27	14		
1FN9-06-04	U11/16"X16	Z1/4"X18				33	33	19		
1FN9-06	U11/16"X16	Z3/8"X18				33	33	19		
1FN9-06-08	U11/16"X16	Z1/2"X14				37	37	22		
1FN9-08-06	U13/16"X16	Z3/8"X18				37	37	22		
1FN9-08	U13/16"X16	Z1/2"X14				37	37	22		
1FN9-08-12	U13/16"X16	Z3/4"X14				40	40	27		
1FN9-10-08	U1"X14	Z1/2"X14				40	40	27		
1FN9-10-12	U1"X14	Z3/4"X14				40	40	27		
1FN9-12-08	U1.3/16"X12	Z1/2"X14				40	40	27		
1FN9-12	U1.3/16"X12	Z3/4"X14				40	40	27		
1FN9-12-16	U1.3/16"X12	Z1"X11.5				45	45	33		
1FN9-16-12	U1.7/16"X12	Z3/4"X14				45	45	33		
1FN9-16	U1.7/16"X12	Z1"X11.5				45	45	33		
1FN9-20-16	U1.11/16"X12	Z1"X11.5				57	57	44		
1FN9-20	U1.11/16"X12	Z1.1/4"X11.5				57	57	44		

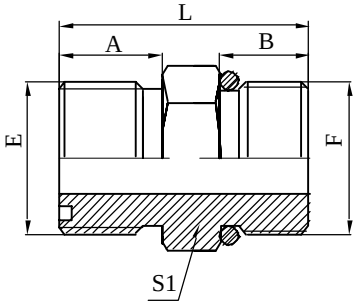

1FH

美制ORFS外螺纹O型圈平面密封/公制外螺纹
ORFS MALE O-RING/METRIC MALE O-RING

代号 PART NO.	螺纹 THREADE					尺 寸 DIMENSIONS				
	E	F				A	B	S1	L	
1FH-04-10	U9/16"X18	M10x1				12	11	17	29	
1FH-04-12	U9/16"X18	M12x1.5				12	11	17	29	
1FH-06-12	U11/16"X16	M12x1.5				14	11	19	31	
1FH-06-14	U11/16"X16	M14x1.5				14	11	19	31	
1FH-06-16	U11/16"X16	M16x1.5				14	11	22	33	
1FH-08-16	U13/16"X16	M16x1.5				15	11	22	34	
1FH-08-18	U13/16"X16	M18x1.5				15	11	24	34	
1FH-08-22	U13/16"X16	M22x1.5				15	12	27	36	
1FH-10-22	U1"X14	M22x1.5				16.5	12	27	37	
1FH-12-22	U1.3/16"X12	M22x1.5				17	12	32	38	
1FH-12-27	U1.3/16"X12	M27x2				17	13	32	39	

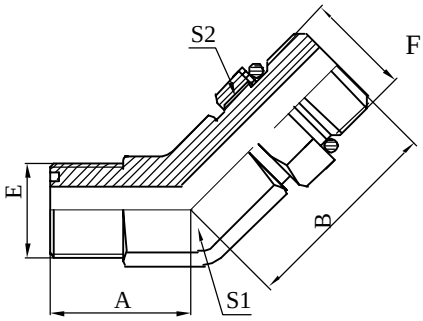

1FH4-OG

45°美制ORFS外螺纹O型圈平面密封/
公制外螺纹可调向柱端
45°ORFS MALE O-RING/ METRIC
MALE ADJUSTABLE STUD END

代号 PART NO.	螺纹 THREADE					尺 寸 DIMENSIONS				
	E	F				A	B	S1		
1FH4-04-14OG	U9/16"X18	M14x1.5				22	29.5	14		
1FH4-06-14OG	U11/16"X16	M14x1.5				25	33	19		
1FH4-06-16OG	U11/16"X16	M16x1.5				25	33.5	19		
1FH4-08-16OG	U13/16"X16	M16x1.5				27	33.5	22		
1FH4-08-18OG	U13/16"X16	M18x1.5				27	36	22		
1FH4-10-22OG	U1"X14	M22x1.5				33	38.5	27		
1FH4-12-22OG	U1.3/16"X12	M22x1.5				37	39.5	33		
1FH4-12-27OG	U1.3/16"X12	M27x2				37	40	33		

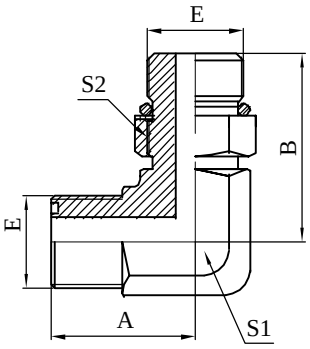

1FH9-OG

90°美制ORFS外螺纹O型圈平面密封/
公制外螺纹可调向柱端
90°ORFS MALE O-RING/ METRIC
MALE ADJUSTABLE STUD END

代号 PART NO.	螺纹 THREADE					尺 寸 DIMENSIONS				
	E	F				A	B	S1		
1FH9-04-12OG	U9/16"X18	M12x1.5				29	32	14		
1FH9-06-14OG	U11/16"X16	M14x1.5				33	35.5	19		
1FH9-06-16OG	U11/16"X16	M16x1.5				33	38	19		
1FH9-08-16OG	U13/16"X16	M16x1.5				37	40.5	22		
1FH9-08-18OG	U13/16"X16	M18x1.5				37	43	22		
1FH9-08-22OG	U13/16"X16	M22x1.5				40	44.5	27		
1FH9-10-22OG	U1"X14	M22x1.5				40	48	27		
1FH9-12-27OG	U1.3/16"X12	M27x2				40	50	27		

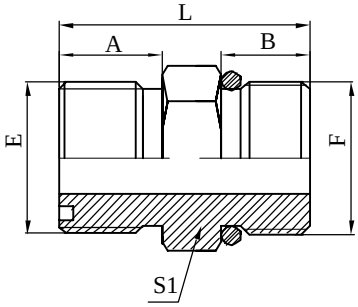

1FO

美制ORFS外螺纹O型圈平面密封/
美制外螺纹带O型圈重系列
ORFS MALE O-RING/
SAE O-RING BOSS S-SERIES

代号 PART NO.	螺纹 THREADE					尺 寸 DIMENSIONS				
	E	F				A	B	S1	L	
1FO-04	U9/16"X18	U7/16"X20				12	10	17	28	
1FO-04-05	U9/16"X18	U1/2"X20				12	10	17	28	
1FO-04-06	U9/16"X18	U9/16"X18				12	12	17	30	
1FO-04-08	U9/16"X18	U3/4"X16				12	12	22	32	
1FO-06-04	U11/16"X16	U7/16"X20				14	10	19	30	
1FO-06-05	U11/16"X16	U1/2"X20				14	10	19	30	
1FO-06	U11/16"X16	U9/16"X18				14	12	19	32	
1FO-06-08	U11/16"X16	U3/4"X16				14	12	22	34	
1FO-06-10	U11/16"X16	U7/8"X14				14	13.5	27	37	
1FO-08-06	U13/16"X16	U9/16"X18				15	12	22	35	
1FO-08	U13/16"X16	U3/4"X16				15	12	22	35	
1FO-08-10	U13/16"X16	U7/8"X14				15	13.5	27	38	
1FO-08-12	U13/16"X16	U1.1/16"X12				15	16	32	40	
1FO-10	U1"X14	U7/8"X14				16.5	13.5	27	39	
1FO-10-08	U1"X14	U3/4"X16				16.5	12	27	38	
1FO-10-12	U1"X14	U1.1/16"X12				16.5	16	32	42	
1FO-12-10	U1.3/16"X12	U7/8"X14				17	13.5	32	41	
1FO-12	U1.3/16"X12	U1.1/16"X12				17	16	32	42	
1FO-12-16	U1.3/16"X12	U1.5/16"X12				17	17	41	46	
1FO-16-12	U1.7/16"X12	U1.1/16"X12				18.5	16	41	46	
1FO-16	U1.7/16"X12	U1.5/16"X12				18.5	17	41	47	
1FO-16-20	U1.7/16"X12	U1.5/8"X12				18.5	18	50	53	
1FO-20-16	U1.11/16"X12	U1.5/16"X12				19.5	17	46	50	
1FO-20	U1.11/16"X12	U1.5/8"X12				19.5	18	50	54	

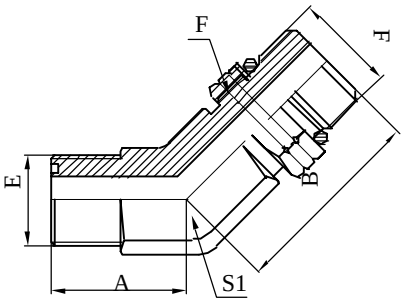

1FO4-OG

45°\u32654X制ORFS外螺纹O型圈平面密封/
美制SAE外螺纹带O型圈
45°ORFS MALE O-RING/
SAE O-RING BOSS

代号 PART NO.	螺纹 THREADE					尺 寸 DIMENSIONS				
	E	F				A	B	S1	S2	
1FO4-04OG	U9/16"X18	U7/16"X20				22	26	14	17	
1FO4-04-06OG	U9/16"X18	U9/16"X18				22	28	14	19	
1FO4-06-04OG	U11/16"X16	U7/16"X20				25	27.3	19	17	
1FO4-06OG	U11/16"X16	U9/16"X18				25	29.5	19	19	
1FO4-06-08OG	U11/16"X16	U3/4"X16				25	32.5	19	24	
1FO4-08-06OG	U13/16"X16	U9/16"X18				27	30.8	22	19	
1FO4-08OG	U13/16"X16	U3/4"X16				27	34	22	24	
1FO4-08-10OG	U13/16"X16	U7/8"X14				27	39.5	22	27	
1FO4-08-12OG	U13/16"X16	U1.1/16"X12				33	44	27	32	
1FO4-10-08OG	U1"X14	U3/4"X16				33	34	27	24	
1FO4-10OG	U1"X14	U7/8"X14				33	41.5	27	27	
1FO4-10-12OG	U1"X14	U1.1/16"X12				33	44	27	32	
1FO4-12-10OG	U1.3/16"X12	U7/8"X14				37	42	33	27	
1FO4-12OG	U1.3/16"X12	U1.1/16"X12				37	45.5	33	32	
1FO4-12-16OG	U1.3/16"X12	U1.5/16"X12				37	47.9	33	41	
1FO4-16-12OG	U1.7/16"X12	U1.1/16"X12				40	47.9	44	32	
1FO4-16OG	U1.7/16"X12	U1.5/16"X12				40	47.9	44	41	
1FO4-16-20OG	U1.7/16"X12	U1.5/8"X12				40	48.5	44	50	
1FO4-20OG	U1.11/16"X12	U1.5/8"X12				40	48.8	44	50	
1FO4-20-24OG	U1.11/16"X12	U1.7/8"X12				47	51	53	55	

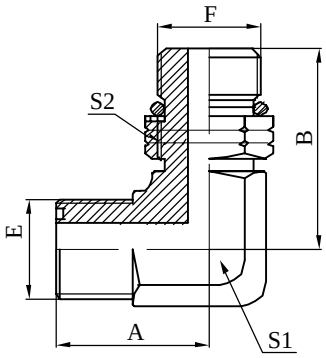

1FO9-OG

90°美制ORFS外螺纹O型圈平面密封/
美制SAE外螺纹带O型圈
90°ORFS MALE O-RING/
SAE O-RING BOSS

代号 PART NO.	螺纹 THREADE					尺 寸 DIMENSIONS				
	E	F				A	B	S1	S2	
1FO9-04OG	U9/16"X18	U7/16"X20				29	30.3	14	17	
1FO9-04-06OG	U9/16"X18	U9/16"X18				29	32	14	19	
1FO9-06-04OG	U11/16"X16	U7/16"X20				33	33.5	19	17	
1FO9-06OG	U11/16"X16	U9/16"X18				33	34.5	19	19	
1FO9-06-08OG	U11/16"X16	U3/4"X16				33	38	19	24	
1FO9-06-10OG	U11/16"X16	U7/8"X14				37	47	22	27	
1FO9-08-06OG	U13/16"X16	U9/16"X18				37	37	22	19	
1FO9-08OG	U13/16"X16	U3/4"X16				37	40.5	22	24	
1FO9-08-10OG	U13/16"X16	U7/8"X14				37	45.3	22	27	
1FO9-08-12OG	U13/16"X16	U1.1/16"X12				40	52	27	32	
1FO9-10-08OG	U1"X14	U3/4"X16				40	45	27	24	
1FO9-10OG	U1"X14	U7/8"X14				40	50.8	27	27	
1FO9-10-12OG	U1"X14	U1.1/16"X12				40	52	27	32	
1FO9-12-10OG	U1.3/16"X12	U7/8"X14				40	52.8	27	27	
1FO9-12OG	U1.3/16"X12	U1.1/16"X12				40	54	27	32	
1FO9-12-16OG	U1.3/16"X12	U1.5/16"X12				45	55.5	33	41	
1FO9-16-12OG	U1.7/16"X12	U1.1/16"X12				45	59	33	32	
1FO9-16OG	U1.7/16"X12	U1.5/16"X12				45	59	33	41	
1FO9-20OG	U1.11/16"X12	U1.5/8"X12				57	60.5	44	50	
1FO9-20-24OG	U1.11/16"X12	U1.7/8"X12				57	66.5	48	55	

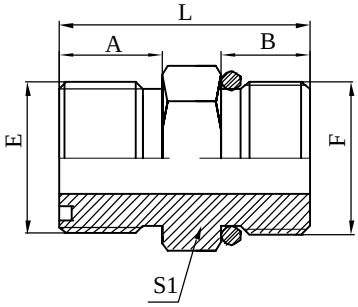

1FG

美制ORFS外螺纹O型圈平面密封/
英管外螺纹O型圈
ORFS MALE O-RING/
BSP MALE O-RING

代号 PART NO.	螺纹 THREADE					尺 寸 DIMENSIONS				
	E	F				A	B	S1	L	
1FG-04-02	U9/16"X18	G1/8"X28				10	9	17	25	
1FG-04	U9/16"X18	G1/4"X19				10	12	19	28	
1FG-04-06	U9/16"X18	G3/8"X19				10	13.5	22	31	
1FG-06	U11/16"X16	G3/8"X19				11	13.5	22	32	
1FG-06-04	U11/16"X16	G1/4"X19				11	12	19	29	
1FG-06-08	U11/16"X16	G1/2"X14				11	16	27	36	
1FG-08	U13/16"X16	G1/2"X14				12	16	27	37	
1FG-08-06	U13/16"X16	G3/8"X19				12	13.5	22	33	
1FG-08-12	U13/16"X16	G3/4"X14				12	18.5	32	40	
1FG-10-08	U1"X14	G1/2"X14				13.5	16	27	39	
1FG-10-12	U1"X14	G3/4"X14				13.5	18.5	32	42	
1FG-12-08	U1.3/16"X12	G1/2"X14				13.5	16	32	39	
1FG-12	U1.3/16"X12	G3/4"X14				13.5	18.5	32	42	
1FG-12-16	U1.3/16"X12	G1"X11				13.5	20.5	41	46	
1FG-16-12	U1.7/16"X12	G3/4"X14				14.5	18.5	41	45	
1FG-16	U1.7/16"X12	G1"X11				14.5	20.5	41	47	
1FG-20	U1.11/16"X12	G1.1/4"X11				15.5	20.5	50	53	
1FG-20-16	U1.11/16"X12	G1"X11				15.5	20.5	46	49	

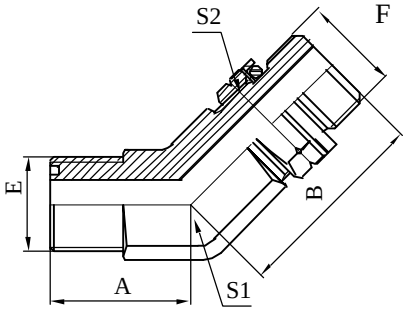

1FG4-OG

45°美制ORFS外螺纹O型圈平面密封/
英管外螺纹O型圈
45°ORFS MALE O-RING/
BSP MALE O-RING

代号 PART NO.	螺纹 THREADE					尺 寸 DIMENSIONS				
	E	F				A	B	S1	S2	
1FG4-04OG	U9/16"X18	G1/4"X19				22	27	14	19	
1FG4-04-02OG	U9/16"X18	G1/8"X28				22	24.8	14	14	
1FG4-04-06OG	U9/16"X18	G3/8"X19				22	30	17	22	
1FG4-06OG	U11/16"X16	G3/8"X19				25	31	19	22	
1FG4-06-04OG	U11/16"X16	G1/4"X19				25	28	19	19	
1FG4-06-08OG	U11/16"X16	G1/2"X14				27	36	22	27	
1FG4-08OG	U13/16"X16	G1/2"X14				27	36	22	27	
1FG4-08-06OG	U13/16"X16	G3/8"X19				27	32	22	22	
1FG4-10-08OG	U1"X14	G1/2"X14				33	37.5	27	27	
1FG4-10-12OG	U1"X14	G3/4"X14				33	42	27	32	
1FG4-12OG	U1.3/16"X12	G3/4"X14				37	42.5	33	32	
1FG4-12-08OG	U1.3/16"X12	G1/2"X14				37	38.5	33	27	
1FG4-12-16OG	U1.3/16"X12	G1"X11				37	44	33	41	
1FG4-16OG	U1.7/16"X12	G1"X11				40	44.5	44	41	
1FG4-16-12OG	U1.7/16"X12	G3/4"X14				40	44.5	44	32	
1FG4-20OG	U1.11/16"X12	G1.1/4"X11				40	47.5	44	50	

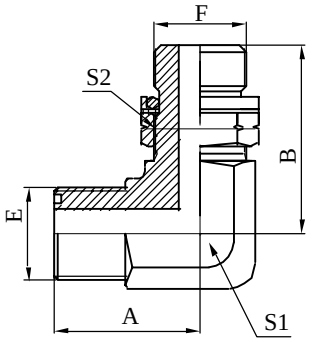

1FG9-OG

90°美制ORFS外螺纹O型圈平面密封/
英管外螺纹O型圈
90°ORFS MALE O-RING/
BSP MALE O-RING

代号 PART NO.	螺纹 THREADE					尺 寸 DIMENSIONS				
	E	F				A	B	S1	S2	
1FG9-04-02OG	U9/16"X18	G1/8"X28				29	29	14	14	
1FG9-04OG	U9/16"X18	G1/4"X19				29	31.3	14	19	
1FG9-04-06OG	U9/16"X18	G3/8"X19				30	35.8	17	22	
1FG9-06-04OG	U11/16"X16	G1/4"X19				33	33.5	19	19	
1FG9-06OG	U11/16"X16	G3/8"X19				33	36.8	19	22	
1FG9-06-08OG	U11/16"X16	G1/2"X14				37	43.2	22	27	
1FG9-08-06OG	U13/16"X16	G3/8"X19				37	39.5	22	22	
1FG9-08OG	U13/16"X16	G1/2"X14				37	43.2	22	27	
1FG9-10-08OG	U1"X14	G1/2"X14				40	46.5	27	27	
1FG9-10-12OG	U1"X14	G3/4"X14				40	49.3	27	32	
1FG9-12-08OG	U1.3/16"X12	G1/2"X14				40	47.5	27	27	
1FG9-12OG	U1.3/16"X12	G3/4"X14				40	52	27	32	
1FG9-12-16OG	U1.3/16"X12	G1"X11				45	53	33	41	
1FG9-16-12OG	U1.7/16"X12	G3/4"X14				45	56	33	32	
1FG9-16OG	U1.7/16"X12	G1"X11				45	56	33	41	
1FG9-20-16OG	U1.11/16"X12	G1"X11				57	60	44	41	
1FG9-20OG	U1.11/16"X12	G1.1/4"X11				57	60	44	50	

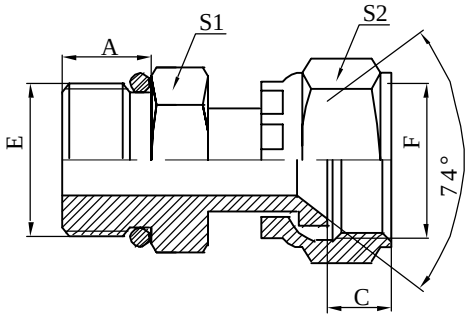

2OF

美制SAE外螺纹O型圈重系列/
ORFS 内螺纹
SAE O-RING BOSS S-SERIES/
ORFS FEMALE

代号 PART NO.	螺纹 THREADE					尺 寸 DIMENSIONS				
	E	F				A	C	S1	S2	
2OF-04	U7/16"X20	U9/16"X18				10	10	14	19	
2OF-04-06	U7/16"X20	U11/16"X16				10	11	17	22	
2OF-06-04	U9/16"X18	U9/16"X18				12	10	17	19	
2OF-06	U9/16"X18	U11/16"X16				12	11	17	22	
2OF-06-08	U9/16"X18	U13/16"X16				12	12	19	27	
2OF-08-06	U3/4"X16	U11/16"X16				12	11	22	22	
2OF-08	U3/4"X16	U13/16"X16				12	12	22	27	
2OF-10-08	U7/8"X14	U13/16"X16				13.5	12	27	27	
2OF-10	U7/8"X14	U1"X14				13.5	13.5	27	32	
2OF-12-10	U1.1/16"X12	U1"X14				16	13.5	32	32	
2OF-12	U1.1/16"X12	U1.3/16"X12				16	13.5	32	36	
2OF-16-12	U1.5/16"X12	U1.3/16"X12				17	13.5	41	36	
2OF-16	U1.5/16"X12	U1.7/16"X12				17	14.5	41	41	
2OF-20-16	U1.5/8"X12	U1.7/16"X12				18	14.5	50	41	
2OF-20	U1.5/8"X12	U1.11/16"X12				18	15.5	50	50	

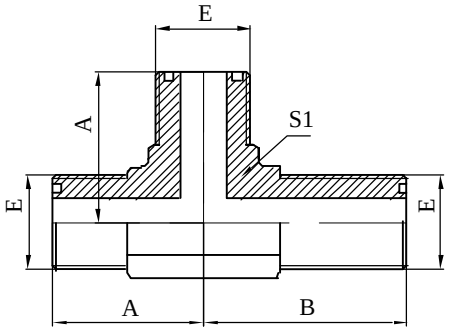

AFF6F

美制ORFS外螺纹O型圈平面密封过板接头主支三通
ORFS MALE O-RING BULKHEAD RUN TEE

代号 PART NO.	螺纹 THREADE					尺 寸 DIMENSIONS				
	E					A	B	S1		
AFF6F-04	U9/16"X18					27	47	14		
AFF6F-06	U11/16"X16					30	52	19		
AFF6F-08	U13/16"X16					33	55.5	22		
AFF6F-10	U1"X14					33	63	24		
AFF6F-12	U1.3/16"X12					40	67.2	27		
AFF6F-16	U1.7/16"X12					45	71.2	33		
AFF6F-20	U1.11/16"X12					57	75.5	44		

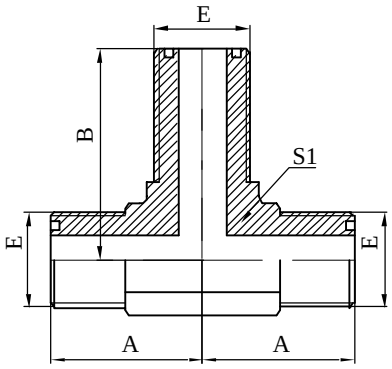

AF6FF

美制ORFS外螺纹O型圈平面密封过板接头分支三通
ORFS MALE O-RING BULKHEAD BRANCH TEE

代号 PART NO.	螺纹 THREADE					尺 寸 DIMENSIONS				
	E					A	B	S1		
AF6FF-04	U9/16"X18					27	47	14		
AF6FF-06	U11/16"X16					30	52	19		
AF6FF-08	U13/16"X16					33	55.5	22		
AF6FF-10	U1"X14					33	63	24		
AF6FF-12	U1.3/16"X12					40	67.2	27		
AF6FF-16	U1.7/16"X12					45	71.2	33		
AF6FF-20	U1.11/16"X12					57	75.5	44		

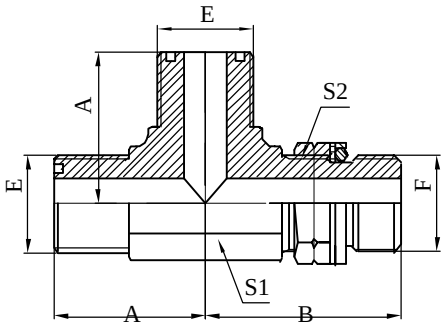

AFFG-OG

美制ORFS外螺纹O型圈平面密封/
英管外螺纹O型圈主支三通
ORFS MALE O-RING/
BSP MALE O-RING RUN TEE

代号 PART NO.	螺纹 THREADE					尺 寸 DIMENSIONS				
	E	F				A	B	S1	S2	
AFFG-04OG	U9/16"X18	G1/4"X19				27	31.3	14	19	
AFFG-04-04-06OG	U9/16"X18	G3/8"X19				28	35.5	17	22	
AFFG-06-06-04OG	U11/16"X16	G1/4"X19				30	33.5	19	19	
AFFG-06OG	U11/16"X16	G3/8"X19				30	36.8	19	22	
AFFG-08-08-06OG	U13/16"X16	G3/8"X19				33	39.5	22	22	
AFFG-08OG	U13/16"X16	G1/2"X14				33	43.2	22	27	
AFFG-10-10-12OG	U1"X14	G3/4"X14				40	49.3	27	32	
AFFG-12OG	U1.3/16"X12	G3/4"X14				40	53.5	27	32	
AFFG-16OG	U1.7/16"X12	G1"X11				45	56	33	41	

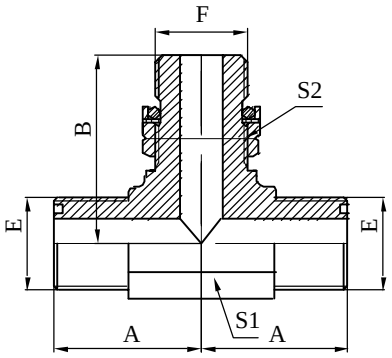

AFGF-OG

美制ORFS外螺纹O型圈平面密封/
英管外螺纹O型圈分支三通
ORFS MALE O-RING/
BSP MALE O-RING RUN TEE

代号 PART NO.	螺纹 THREADE					尺 寸 DIMENSIONS				
	E	F				A	B	S1	S2	
AFGF-04OG	U9/16"X18	G1/4"X19				27	31.3	14	19	
AFGF-04-06-04OG	U9/16"X18	G3/8"X19				28	35.5	17	22	
AFGF-06OG	U11/16"X16	G3/8"X19				30	36.8	19	22	
AFGF-08-06-08OG	U13/16"X16	G3/8"X19				33	39.5	22	22	
AFGF-08OG	U13/16"X16	G1/2"X14				33	43.2	22	27	
AFGF-10-12-10OG	U1"X14	G3/4"X14				40	49.3	27	32	
AFGF-12OG	U1.3/16"X12	G3/4"X14				40	53.5	27	32	
AFGF-16OG	U1.7/16"X12	G1"X11				45	56	33	41	

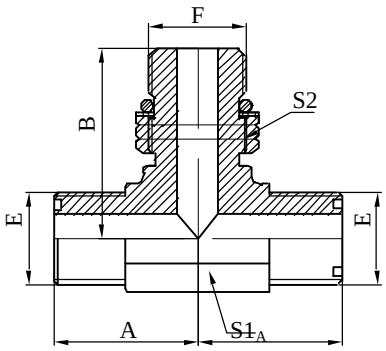

AFOF-OG

美制ORFS外螺纹O型圈平面密封/
美制SAE外螺纹带O型圈分支三通
ORFS MALE O-RING/
SAE O-RING BOSS BRANCH TEE

代号 PART NO.	螺纹 THREADE					尺 寸 DIMENSIONS				
	E	F				A	B	S1	S2	
AFOF-04OG	U9/16"X18	U7/16"X20				27	30.3	14	17	
AFOF-04-06-04OG	U9/16"X18	U9/16"X18				27	32	14	19	
AFOF-06OG	U11/16"X16	U9/16"X18				30	35.5	19	19	
AFOF-06-08-06OG	U11/16"X16	U3/4"X16				30	38	19	24	
AFOF-08OG	U13/16"X16	U3/4"X16				33	40.5	22	24	
AFOF-08-10-08OG	U13/16"X16	U7/8"X14				33	45.3	22	27	
AFOF-08-12-08OG	U13/16"X16	U1.1/16"X12				33	54	24	32	
AFOF-10OG	U1"X14	U7/8"X14				40	50.8	27	27	
AFOF-10-12-10OG	U1"X14	U1.1/16"X12				40	52	27	32	
AFOF-12OG	U1.3/16"X12	U1.1/16"X12				40	55.3	27	32	
AFOF-16OG	U1.7/16"X12	U1.5/16"X12				45	59.3	33	41	
AFOF-20OG	U1.11/16"X12	U1.5/8"X12				57	60.5	44	50	

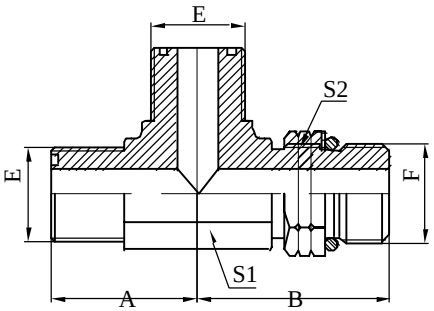

AFFO-OG

美制ORFS外螺纹O型圈平面密封/
美制SAE外螺纹带O型圈主支三通
ORFS MALE O-RING/
SAE O-RING BOSS RUN TEE

代号 PART NO.	螺纹THREADE					尺 寸 DIMENSIONS				
	E	F				A	B	S1	S2	
AFFO-04OG	U9/16"X18	U7/16"X20				27	30	14	17	
AFFO-04-04-06OG	U9/16"X18	U9/16"X18				27	32	14	19	
AFFO-06OG	U11/16"X16	U9/16"X18				30	35.5	19	19	
AFFO-06-06-08OG	U11/16"X16	U3/4"X16				30	38	19	24	
AFFO-08-08-06OG	U13/16"X16	U9/16"X18				33	37.5	22	19	
AFFO-08OG	U13/16"X16	U3/4"X16				33	40.5	22	24	
AFFO-08-08-10OG	U13/16"X16	U7/8"X14				33	45.3	22	27	
AFFO-08-08-12OG	U13/16"X16	U1.1/16"X12				33	54	24	32	
AFFO-10OG	U1"X14	U7/8"X14				40	50.8	27	27	
AFFO-10-10-12OG	U1"X14	U1.1/16"X12				40	52	27	32	
AFFO-12OG	U1.3/16"X12	U1.1/16"X12				40	55.3	27	32	
AFFO-16-16-12OG	U1.7/16"X12	U1.1/16"X12				45	59.5	33	32	
AFFO-16OG	U1.7/16"X12	U1.5/16"X12				45	59.3	33	41	
AFFO-20OG	U1.11/16"X12	U1.5/8"X12				57	60.5	44	50	

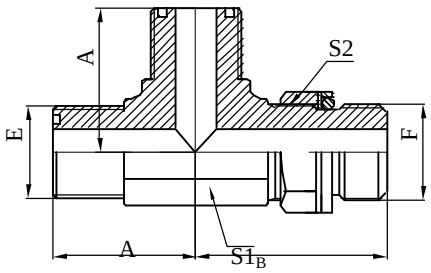

AFFH-OG

美制ORFS外螺纹O型圈平面密封/
公制外螺纹可调向柱端主支三通
ORFS MALE O-RING/ METRIC
MALE ADJUSTABLE STUD END RUN TEE

代号 PART NO.	螺纹 THREADE		O型圈 O RING			尺 寸 DIMENSIONS				
	E	F	F端			A	B	S1	S2	
AFFH-04-04-14OG	U9/16"X18	M14x1.5	11.3x2.4			27	33.5	14	19	
AFFH-06-06-16OG	U11/16"X16	M16x1.5	13.3x2.4			30	38	19	22	
AFFH-08-08-22OG	U13/16"X16	M22x1.5	19.3x2.4			33	44.5	24	27	
AFFH-10-10-22OG	U1"X14	M22x1.5	19.3x2.4			40	48	27	27	
AFFH-12-12-27OG	U1.3/16"X12	M27x2	23.5x3			40	50	27	32	

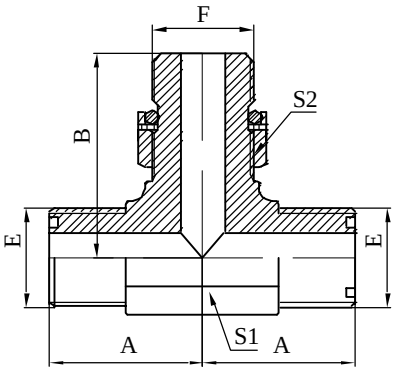

AFHF-OG

美制ORFS外螺纹O型圈平面密封/
公制外螺纹可调向柱端分支三通
ORFS MALE O-RING/ METRIC
MALE ADJUSTABLE STUD END BRANCH TEE

代号 PART NO.	螺纹 THREADE		O型圈 O RING			尺 寸 DIMENSIONS				
	E	F	F端			A	B	S1	S2	
AFHF-04-14-04OG	U9/16"X18	M14x1.5	11.3x2.4			27	23	14	19	
AFHF-06-16-06OG	U11/16"X16	M16x1.5	13.3x2.4			30	27	19	22	
AFHF-08-22-08OG	U13/16"X16	M22x1.5	19.3x2.4			33	31	24	27	
AFHF-10-22-10OG	U1"X14	M22x1.5	19.3x2.4			40	36.5	27	27	
AFHF-12-27-12OG	U1.3/16"X12	M27x2	23.5x3			40	40.5	27	32	

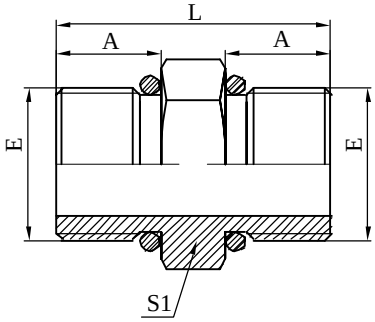

1G

英管外螺纹O型圈
BSP MALE O-RING

代号 PART NO.	螺纹 THREADE					尺 寸 DIMENSIONS				
	E					A		S1		L
1G-02	G1/8"x28					9		14		24
1G-04	G1/4"x19					12		19		30
1G-06	G3/8"x19					13.5		22		35
1G-08	G1/2"x14					16		27		41
1G-12	G3/4"x14					18.5		32		47
1G-16	G1"x11					20.5		41		53
1G-20	G1.1/4"x12					20.5		50		55
1G-24	G1.1/2"x11					23		55		62

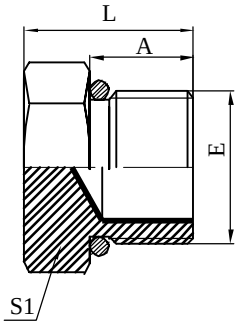

4G

英管外螺纹O型圈堵头
BSP MALE O-RING PLUG

代号 PART NO.	螺纹 THREADE					尺 寸 DIMENSIONS				
	E					A		S1		L
4G-04	G1/4"x19					12		19		18
4G-06	G3/8"x19					13.5		22		21
4G-08	G1/2"x14					16		27		25
4G-12	G3/4"x14					18.5		32		28
4G-16	G1"x11					20.5		41		32

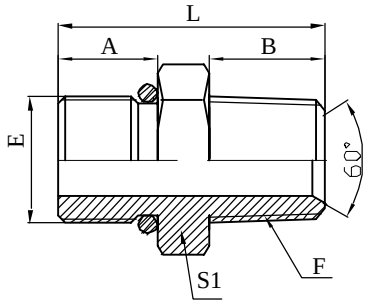

1GT

英管外螺纹O型圈/英锥管外螺纹
BSP MALE O-RING/BSPT MALE

代号 PART NO.	螺纹 THREADE					尺 寸 DIMENSIONS				
	E	F				A	B	S1		L
1GT-04-04	G1/4"X19	ZG1/4"X19				12	14	19		32
1GT-06-04	G3/8"X19	ZG1/4"X19				13.5	14	22		35.5
1GT-06-06	G3/8"X19	ZG3/8"X19				13.5	14	22		35.5
1GT-08-06	G1/2"X14	ZG3/8"X19				16	14	27		38
1GT-08-08	G1/2"X14	ZG1/2"X14				16	19	27		43
1GT-12-08	G3/4"X14	ZG1/2"X14				18.5	19	32		48
1GT-12-12	G3/4"X14	ZG3/4"X14				18.5	19.5	32		48
1GT-16-16	G1"X11	ZG1"X11				20.5	24	41		55
1GT-20-20	G1.1/4"X11	ZG1.1/4"X11				20.5	25	50		62
1GT-24-24	G1.1/2"X11	ZG1.1/2"X11				23	25	55		65
1GT-32-32	G2"X11	ZG2"X11				25.5	29	70		72

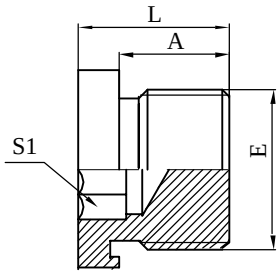

4HN

公制外螺纹轻系列内六角堵头
METRIC MALE L-SERIES
HOLLOW HEX PLUG

代号 PART NO.	螺纹 THREADE					尺 寸 DIMENSIONS				
	E					A		S1		L
4HN-10	M10x1					11		5		14
4HN-12	M12x1.5					11		6		14
4HN-14	M14x1.5					11		6		14
4HN-16	M16x1.5					11		8		13.5
4HN-18	M18x1.5					11		8		14.5
4HN-22	M22x1.5					12		10		15
4HN-27	M27x2					13		12		16

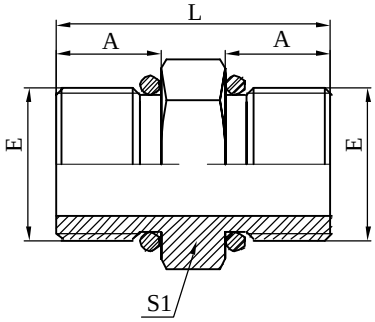

1H

公制外螺纹轻系列
METRIC MALE L-SERIES

代号 PART NO.	螺纹 THREADE					尺 寸 DIMENSIONS				
	E					A		S1		L
1H-10	M10x1					11		14		28
1H-12	M12x1.5					11		17		28
1H-14	M14x1.5					11		19		28
1H-16	M16x1.5					11		22		30
1H-18	M18x1.5					11		24		30
1H-22	M22x1.5					12		27		33
1H-27	M27x2					13		32		35

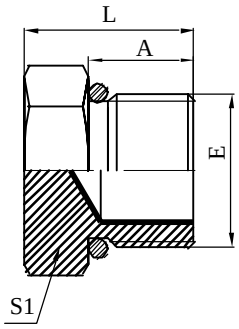

4H

公制外螺纹轻系列堵头
METRIC MALE L-SERIES PLUG

代号 PART NO.	螺纹 THREADE					尺 寸 DIMENSIONS				
	E					A		S1		L
4H-10	M10x1					11		14		17
4H-12	M12x1.5					11		17		17
4H-14	M14x1.5					11		19		17
4H-16	M16x1.5					11		22		19
4H-18	M18x1.5					11		24		19
4H-22	M22x1.5					12		27		21
4H-27	M27x2					13		32		22

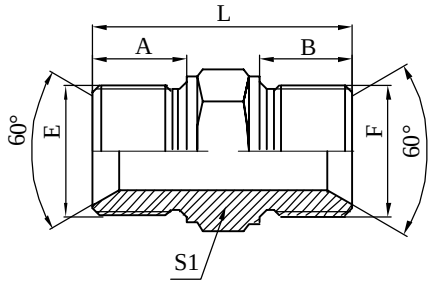

1M

公制外螺纹60°内锥或六角端面组合垫密封
METRIC MALE DOUBLE FOR 60 °
CONE SEAT BONDED SEAL

代号 PART NO.	螺纹 THREADE					尺 寸 DIMENSIONS				
	E	F				A	B	S1		L
1M-12	M12x1.5	M12x1.5				10	10	17		30
1M-12-14	M12x1.5	M14x1.5				10	11	19		31
1M-14	M14x1.5	M14x1.5				11	11	19		32
1M-14-16	M14x1.5	M16x1.5				11	12	22		35
1M-16	M16x1.5	M16x1.5				12	12	22		36
1M-16-18	M16x1.5	M18x1.5				12	12	24		36
1M-18	M18x1.5	M18x1.5				12	12	24		36
1M-18-22	M18x1.5	M22x1.5				12	14	27		38
1M-22	M22x1.5	M22x1.5				14	14	27		42

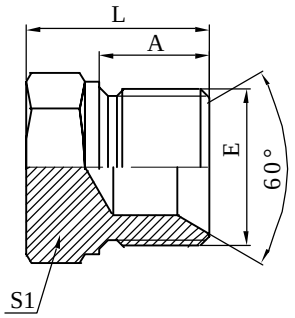

4M

公制外螺纹60°外锥或六角端面组合垫密封堵头
METRIC MALE DOUBLE FOR 60 °
CONE SEAT BONDED SEAL PLUG

代号 PART NO.	螺纹 THREADE					尺 寸 DIMENSIONS				
	E	F				A		S1		L
4M-12	M12x1.5	M12x1.5				10		17		18
4M-14	M14x1.5	M14x1.5				11		19		19
4M-16	M16x1.5	M16x1.5				12		22		21
4M-18	M18x1.5	M18x1.5				12		24		21
4M-22	M22x1.5	M22x1.5				14		27		24

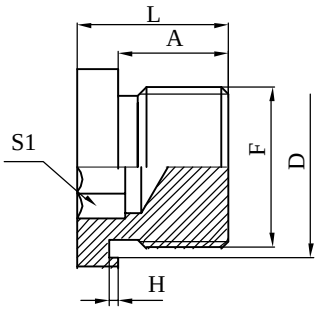

4MN-WD

公制外螺纹胶垫密封内六角堵头
METRIC MALE CAPTIVE
SEAL HOLLOW HEX PLUG

代号 PART NO.	螺纹 THREADE					尺 寸 DIMENSIONS				
	E					A	D	H	S1	L
4MN-12WD	M12x1.5					10	14.2	1.2	6	15
4MN-14WD	M14x1.5					11	16.3	1.2	6	16
4MN-16WD	M16x1.5					12	18.7	1.2	8	17
4MN-18WD	M18x1.5					12	20.7	1.2	8	17
4MN-22WD	M22x1.5					14	24.1	1.2	10	19

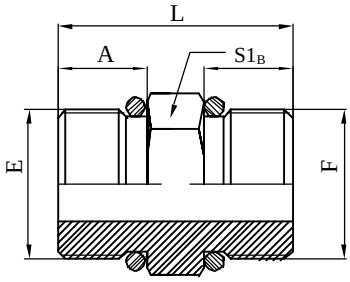

1O

美制SAE外螺纹带O型圈
SAE O-RING BOSS

代号 PART NO.	螺纹 THREADE					尺 寸 DIMENSIONS				
	E	F				A	B	S1	L	
1O-04	U7/16"X20	U7/16"X20				10	10	14	26	
1O-04-06	U7/16"X20	U9/16"X18				10	12	17	28	
1O-06	U9/16"X18	U9/16"X18				12	12	17	30	
1O-06-08	U9/16"X18	U3/4"X16				12	12	22	31	
1O-08	U3/4"X16	U3/4"X16				12	12	22	31	
1O-08-12	U3/4"X16	U1.1/16"X12				12	16	32	34	
1O-10	U7/8"X14	U7/8"X14				13.5	13.5	27	35	
1O-12	U1.1/16"X12	U1.1/16"X12				16	16	32	41	
1O-16	U1.5/16"X12	U1.5/16"X12				17	17	41	44	
1O-20	U1.5/8"X12	U1.5/8"X12				18	18	50	48.5	
1O-24	U1.7/8"X12	U1.7/8"X12				18.5	18.5	55	55	

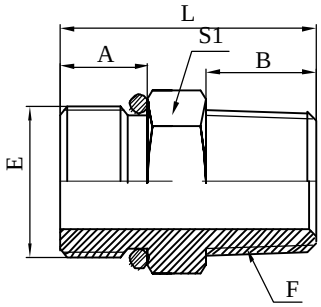

1OT

美制SAE外螺纹带O型圈/英锥管外螺纹
SAE O-RING BOSS/BSPT MALE

代号 PART NO.	螺纹 THREADE					尺 寸 DIMENSIONS				
	E	F				A	B	S1	L	
1OT-04-04	U7/16"X20	ZG1/4"-19				10	14	14	30	
1OT-04-06	U7/16"X20	ZG3/8"-19				10	14	17	30	
1OT-06-06	U9/16"X18	ZG3/8"-19				12	14	17	33	
1OT-06-08	U9/16"X18	ZG1/2"-14				12	19	22	38	
1OT-08-08	U3/4"X16	ZG1/2"-14				12	19	22	38.5	
1OT-08-12	U3/4"X16	ZG3/4"-14				12	29	32	39	
1OT-12-12	U1.1/16"X12	ZG3/4"-14				16	29	32	53	
1OT-16-16	U1.5/16"X12	ZG1"-11				17	29	41	55	
1OT-20-20	U1.5/8"X12	ZG1.1/4"-11				18	29	50	58	
1OT-24-24	U1.7/8"X12	ZG1.1/2"-11				18.5	29	55	60	

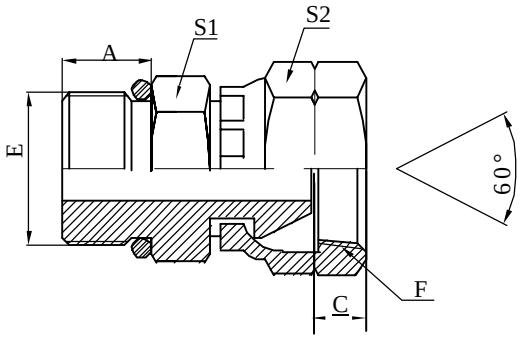

2OU

SAE外螺纹带O型圈/
美制NPSM内螺纹60 °外锥
SAE O-RING BOSS /
NPSM FEMALE 60°CONE

代号 PART NO.	螺纹 THREADE					尺 寸 DIMENSIONS				
	E	F				A	C	S1	S2	
2OU-04	U7/16"X20	Z1/4"X18				10	5.5	14	19	
2OU-04-06	U7/16"X20	Z3/8"X18				10	6.5	17	22	
2OU-06	U9/16"X18	Z3/8"X18				12	6.5	19	22	
2OU-06-08	U9/16"X18	Z1/2"X14				12	8	22	27	
2OU-08	U3/4"X16	Z1/2"X14				12	8	22	27	
2OU-08-06	U3/4"X16	Z3/8"X18				12	6.5	22	22	
2OU-10-08	U7/8"X14	Z1/2"X14				13.5	8	27	27	
2OU-12-08	U1.1/16"X12	Z1/2"X14				16	8	32	27	
2OU-12	U1.1/16"X12	Z3/4"X14				16	11.5	32	32	
2OU-12-16	U1.1/16"X12	Z1"X11.5				16	11.5	36	41	
2OU-16	U1.5/16"X12	Z1"X11.5				17	11.5	41	41	
2OU-20	U1.5/8"X12	Z1.1/4"X11.5				18	12	50	50	
2OU-24	U1.7/8"X12	Z1.1/2"X11.5				18.5	13	55	55	

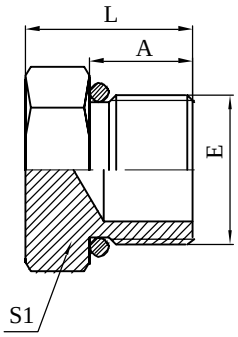

4O

美制SAE外螺纹带O型圈堵头
SAE O-RING BOSS PLUG

代号 PART NO.	螺纹 THREADE					尺 寸 DIMENSIONS				
	E					A		S1		L
4O-04	U7/16"X20					10		14		16
4O-05	U1/2"X20					10		17		16
4O-06	U9/16"X18					12		17		18
4O-08	U3/4"X16					12		22		20
4O-10	U7/8"X14					13.5		27		23
4O-12	U1.1/16"X12					16		32		26
4O-16	U1.5/16"X12					17		41		28
4O-20	U1.5/8"X12					18		50		32
4O-24	U1.7/8"X12					18.5		55		35
4O-32	U2.1/2"X12					22		70		40

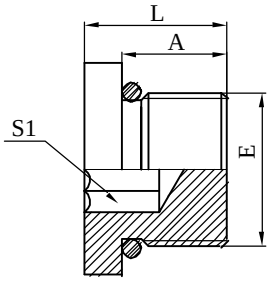

4ON

美制SAE外螺纹带O型圈内六角堵头
SAE O-RING BOSS HOLLOW HEX PLUG

代号 PART NO.	螺纹 THREADE					尺 寸 DIMENSIONS				
	E					A		S1		L
4ON-04	U7/16"X20					10		5		12
4ON-05	U1/2"X20					10		5		12
4ON-06	U9/16"X18					12		6		15
4ON-08	U3/4"X16					12		8		15
4ON-10	U7/8"X14					13.5		10		16.5
4ON-12	U1.1/16"X12					16		14		20
4ON-16	U1.5/16"X12					17		16		21
4ON-20	U1.5/8"X12					18		19		22

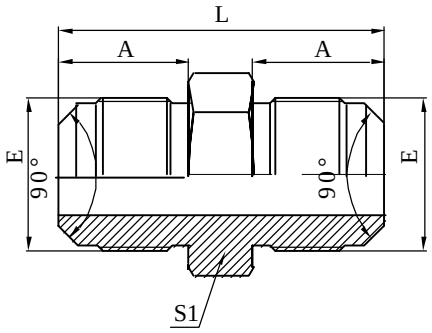

1P

美制SAE外螺纹90°外锥
SAE MALE 90°CONE

代号 PART NO.	螺纹 THREADE					尺 寸 DIMENSIONS				
	E					A		S1		L
1P-04	U7/16"X20					13		14		32
1P-05	U1/2"X20					14		14		34
1P-06	U5/8"X18					16		17		38
1P-08	U3/4"X16					19		22		46
1P-10	U7/8"X14					22.5		24		52.5
1P-12	U1.1/16"X12					25.5		30		60.5

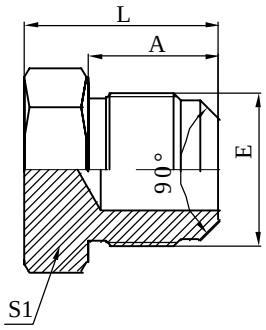

4P

美制SAE外螺纹90°外锥堵头
SAE MALE 90°CONE PLUG

代号 PART NO.	螺纹 THREADE					尺 寸 DIMENSIONS				
	E					A		S1		L
4P-04	U7/16"X20					13		14		19
4P-05	U1/2"X20					14		14		20
4P-06	U5/8"X18					16		17		22
4P-08	U3/4"X16					19		22		27
4P-10	U7/8"X14					22.5		24		30
4P-12	U1.1/16"X12					25.5		30		35

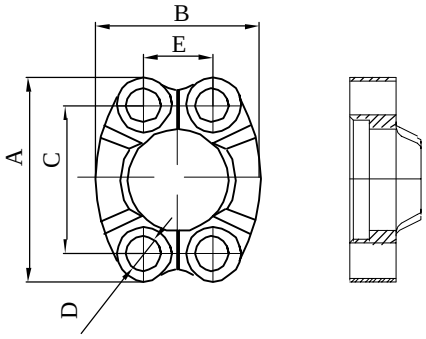

FL

轻系列对开法兰夹
L-SERIES SPLIT FLANGE CLAMPS

代号 PART NO.	法兰型号 FLANGE SIZE	螺栓 BOLT			尺 寸 DIMENSIONS				
					A	B	C	D	E
FL-08	1/2"	M8x25			54	46	38.1	9	17.5
FL-12	3/4"	M10x30			65.1	52	47.6	11	22.2
FL-16	1"	M10x30			69.8	59	52.4	11	26.2
FL-20	1.1/4"	M10x30			79.4	73	58.7	11	30.2
FL-24	1.1/2"	M12x35			93.7	83	69.8	13.5	35.7
FL-32	2"	M12x35			101.6	97	77.8	13.5	42.9
FL-40	2.1/4"	M12x40			114	108	89	13.5	50.8
FL-48	3"	M16x50			135	130.6	106.4	16.7	62

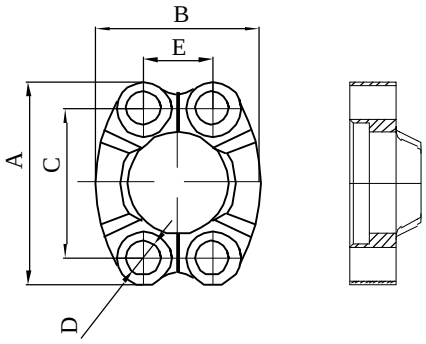

FS

重系列对开法兰夹
S-SERIES SPLIT FLANGE CLAMPS

代号 PART NO.	法兰型号 FLANGE SIZE	螺栓 BOLT			尺 寸 DIMENSIONS				
					A	B	C	D	E
FS-08	1/2"	M8x30			56.3	47	40.5	9	18.2
FS-12	3/4"	M10x35			71.4	60	50.8	11	23.8
FS-16	1"	M12x45			80.9	70	57.1	13	27.8
FS-20	1.1/4"	M14x30			95.2	77	66.7	15	31.8
FS-24	1.1/2"	M16x55			112.7	95	79.5	17	36.5
FS-32	2"	M20x70			133.3	114	96.8	21	44.5

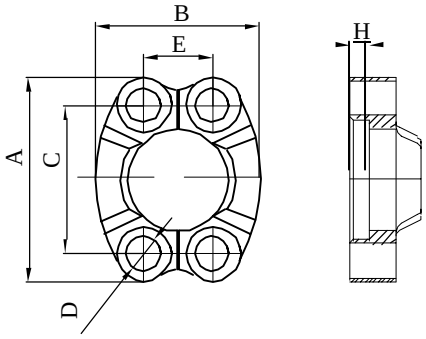

FL-W

轻系列整体法兰夹
L-SERIES WHOLE FLANGE CLAMPS

代号 PART NO.	法兰型号 FLANGE SIZE	螺栓 BOLT		尺 寸DIMENSIONS					
				A	B	C	D	E	H
FL-08W	1/2"	M8x25		54	46	38.1	9	17.5	6.2
FL-12W	3/4"	M10x30		65.1	52	47.6	11	22.2	6.2
FL-16W	1"	M10x30		69.8	59	52.4	11	26.2	7.5
FL-20W	1.1/4"	M10x30		79.4	73	58.7	11	30.2	7.5
FL-24W	1.1/2"	M12x35		93.7	83	69.8	13.5	35.7	7.5
FL-32W	2"	M12x35		101.6	97	77.8	13.5	42.9	9
FL-40W	2.1/4"	M12x40		114	108	89	13.5	50.8	9
FL-48W	3"	M16x50		135	130.6	106.4	16.7	62	9

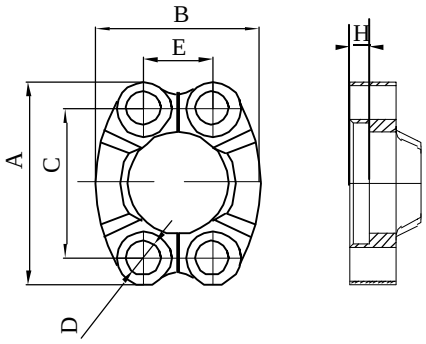

FS-W

重系列整体法兰夹
S-SERIES WHOLE FLANGE CLAMPS

代号 PART NO.	法兰型号 FLANGE SIZE	螺栓 BOLT		尺 寸 DIMENSIONS					
				A	B	C	D	E	H
FS-08W	1/2"	M8x30		56.3	47	40.5	9	18.2	7.2
FS-12W	3/4"	M10x35		71.4	60	50.8	11	23.8	8.2
FS-16W	1"	M12x45		80.9	70	57.1	13	27.8	9
FS-20W	1.1/4"	M14x30		95.2	77	66.7	15	31.8	9.8
FS-24W	1.1/2"	M16x55		112.7	95	79.5	17	36.5	12
FS-32W	2"	M20x70		133.3	114	96.8	21	44.5	12

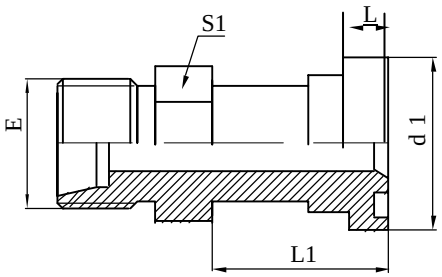

1CFL

公制螺纹卡套式/轻系列法兰
METRIC MALE BITE TYPE/
L-SERIES FLANGE

代号 PART NO.	螺纹 THREADE	法兰型号 FLANGE SIZE	管子外径 D TUBE O.D.		尺 寸 DIMENSIONS				
	E				L	L1	d1	S1	
1CFL-22-08	M22x1.5	1/2"	15		7	35	30.2	24	
1CFL-26-12	M26x1.5	3/4"	18		7	46	38.1	30	
1CFL-30-12	M30x2	3/4"	22		7	46	38.1	32	
1CFL-36-16	M36x2	1"	28		8.2	50	44.4	41	
1CFL-45-20	M45x2	1.1/4"	35		8.2	66	50.8	41	
1CFL-52-24	M52x2	1.1/2"	42		8.2	70	60.3	46	

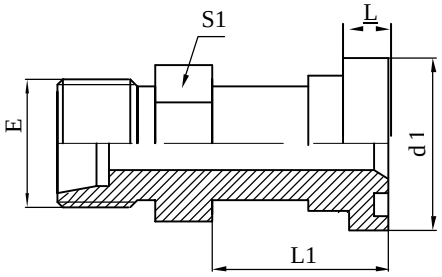

1DFL

公制螺纹卡套式/轻系列法兰
METRIC MALE BITE TYPE/
L-SERIES FLANGE

代号 PART NO.	螺纹 THREADE	法兰型号 FLANGE SIZE	管子外径 D TUBE O.D.		尺 寸 DIMENSIONS				
	E				L	L1	d1	S1	
1DFL-24-08	M24x1.5	1/2"	16		7	35	30.2	24	
1DFL-24-12	M24x1.5	3/4"	20		7	46	38.1	27	
1DFL-30-12	M30x2	3/4"	20		7	46	38.1	30	
1DFL-36-12	M36x2	3/4"	25		7	46	38.1	30	
1DFL-42-16	M42x2	1"	30		8.2	50	44.4	36	
1DFL-36-20	M36x2	1.1/4"	25		8.2	66	50.8	41	
1DFL-42-20	M42x2	1.1/4"	30		8.2	66	50.8	41	
1DFL-52-20	M52x2	1.1/4"	38		8.2	66	50.8	46	
1DFL-52-24	M52x2	1.1/2"	38		8.2	70	60.3	46	

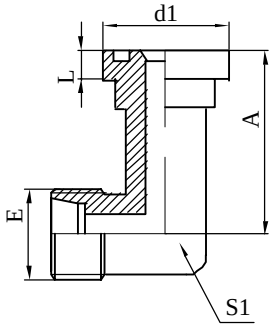

1CFL9

90°公制螺纹卡套式/轻系列法兰
90°METRIC MALE BITE TYPE/
L-SERIES FLANGE

代号 PART NO.	螺纹 THREADE E	法兰型号 FLANGE SIZE	管子外径 D TUBE O.D.		尺 寸 DIMENSIONS				
					L	A	d1	S1	
1CFL9-22-08	M22x1.5	1/2"	15		7	36	30.2	22	
1CFL9-26-12	M26x1.5	3/4"	18		7	42	38.1	27	
1CFL9-30-12	M30x2	3/4"	22		7	42	38.1	27	
1CFL9-36-16	M36x2	1"	28		8.2	45	44.4	33	
1CFL9-45-20	M45x2	1.1/4"	35		8.2	50	50.8	44	
1CFL9-52-24	M52x2	1.1/2"	42		8.2	55	60.3	50	

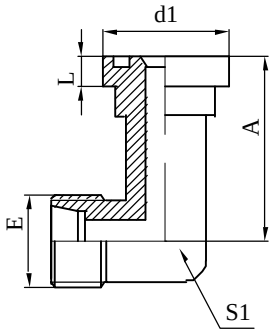

1DFL9

90°公制螺纹卡套式/轻系列法兰
90°METRIC MALE BITE TYPE/
L-SERIES FLANGE

代号 PART NO.	螺纹 THREADE E	法兰型号 FLANGE SIZE	管子外径 D TUBE O.D.		尺 寸 DIMENSIONS				
					L	A	d1	S1	
1DFL9-24-08	M24x1.5	1/2"	16		7	36	30.2	27	
1DFL9-30-12	M30x2	3/4"	20		7	42	38.1	27	
1DFL9-36-12	M36x2	3/4"	25		7	42	38.1	33	
1DFL9-42-16	M42x2	1"	30		8.2	45	44.4	44	
1DFL9-36-20	M36x2	1.1/4"	25		8.2	50	50.8	44	
1DFL9-42-20	M42x2	1.1/4"	30		8.2	50	50.8	44	
1DFL9-52-20	M52x2	1.1/4"	38		8.2	50	50.8	50	
1DFL9-52-24	M52x2	1.1/2"	38		8.2	55	60.3	50	

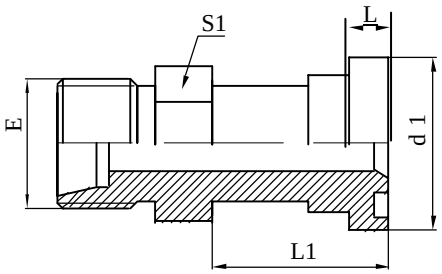

1DFS

公制螺纹卡套式/重系列法兰
METRIC MALE BITE TYPE/
S-SERIES FLANGE

代号 PART NO.	螺纹 THREADE	法兰型号 FLANGE SIZE	管子外径 D TUBE O.D.		尺 寸 DIMENSIONS				
	E				L	L1	d1	S1	
1DFS-24-08	M24x1.5	1/2"	16		7.9	37	31.7	24	
1DFS-24-12	M24x1.5	3/4"	16		8.9	51	41.3	30	
1DFS-30-12	M30x2	3/4"	20		8.9	51	41.3	30	
1DFS-36-12	M36x2	3/4"	25		8.9	51	41.3	30	
1DFS-36-16	M36x2	1"	25		9.6	53	47.6	36	
1DFS-42-16	M42x2	1"	30		9.6	53	47.6	36	
1DFS-42-20	M42x2	1.1/4"	30		10.4	70	54	41	
1DFS-52-20	M52x2	1.1/4"	38		10.4	70	54	46	
1DFS-52-24	M52x2	1.1/2"	38		12.7	80	63.5	46	

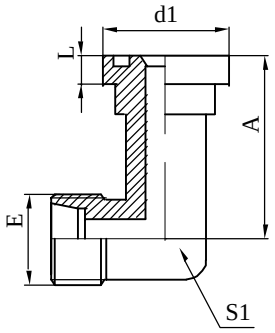

1DFS9

90°公制螺纹卡套式/重系列法兰
90°METRIC MALE BITE TYPE/
S-SERIES FLANGE

代号 PART NO.	螺纹 THREADE	法兰型号 FLANGE SIZE	管子外径 D TUBE O.D.		尺 寸 DIMENSIONS				
	E				L	A	d1	S1	
1DFS9-24-08	M24x1.5	1/2"	16		7.9	39	31.7	24	
1DFS9-24-12	M24x1.5	3/4"	16		8.9	48	41.3	30	
1DFS9-30-12	M30x2	3/4"	20		8.9	48	41.3	30	
1DFS9-36-12	M36x2	3/4"	25		8.9	48	41.3	36	
1DFS9-36-16	M36x2	1"	25		9.6	60	47.6	41	
1DFS9-42-16	M42x2	1"	30		9.6	60	47.6	41	
1DFS9-42-20	M42x2	1.1/4"	30		10.4	68	54	46	
1DFS9-52-20	M52x2	1.1/4"	38		10.4	68	54	46	
1DFS9-52-24	M52x2	1.1/2"	38		12.7	76	63.5	46	

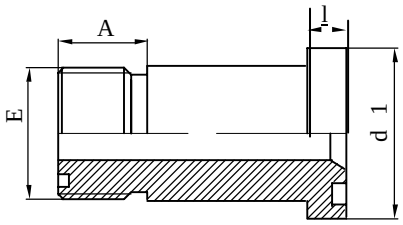

1FFL

美制ORFS外螺纹O型圈平面
密封/轻系列法兰
ORFS MALE O-RING/
L-SERIES FLANGE

代号 PART NO.	螺纹 THREADE E	法兰型号 FLANGE SIZE			尺 寸 DIMENSIONS				
					l	d1	A		
1FFL-12	U1.3/16"x12	3/4"			7	38.1	17		
1FFL-16	U1.7/16"x12	1"			8.2	44.4	18.5		
1FFL-20	U1.11/16"x12	1.1/4"			8.2	50.8	19.5		

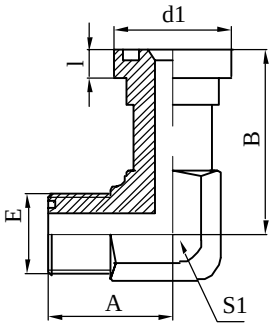

1FFL9

90°美制ORFS外螺纹O型圈平面
密封/轻系列法兰
90°ORFS MALE O-RING/
L-SERIES FLANGE

代号 PART NO.	螺纹 THREADE E	法兰型号 FLANGE SIZE			尺 寸 DIMENSIONS				
					l	d1	A	B	S1
1FFL9-12	U1.3/16"x12	3/4"			7	38.1	43	54.1	27
1FFL9-16	U1.7/16"x12	1"			8.2	44.4	59	60.2	44
1FFL9-20	U1.11/16"x12	1.1/4"			8.2	50.8	59	66.5	44

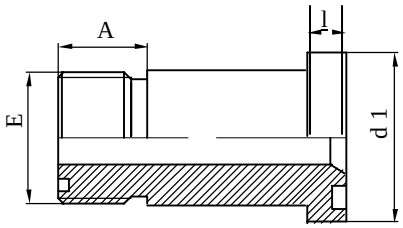

1FFS

美制ORFS外螺纹O型圈平面
密封/重系列法兰
ORFS MALE O-RING/
S-SERIES FLANGE

代号 PART NO.	螺纹 THREADE E	法兰型号 FLANGE SIZE			尺 寸 DIMENSIONS				
					l	d1	A		
1FFS-12	U1.3/16"x12	3/4"			8.9	41.3	17		
1FFS-16	U1.7/16"x12	1"			9.6	47.6	18.5		
1FFS-20	U1.11/16"x12	1.1/4"			10.4	54	19.5		

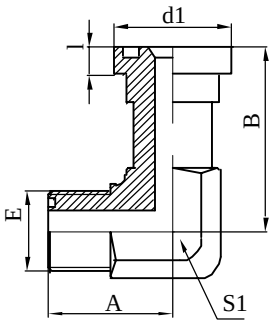

1FFS9

90°美制ORFS外螺纹O型圈平面
密封/重系列法兰
90°ORFS MALE O-RING/
S-SERIES FLANGE

代号 PART NO.	螺纹 THREADE E	法兰型号 FLANGE SIZE			尺 寸 DIMENSIONS				
					l	d1	A	B	S1
1FFS9-12	U1.3/16"x12	3/4"			8.9	41.3	40	54.1	27
1FFS9-16	U1.7/16"x12	1"			9.6	47.6	49	60.2	33
1FFS9-20	U1.11/16"x12	1.1/4"			10.4	54	57	66.5	44

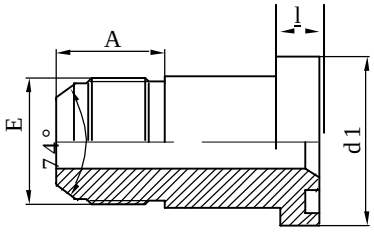

1JFL

美制JIC外螺纹74°外锥/轻系列法兰
JIC MALE 74°CONE/L-SERIES FLANGE

代号 PART NO.	螺纹 THREADE E	法兰型号 FLANGE SIZE			尺 寸 DIMENSIONS				
					l	d1	A		
1JFL-08	U3/4"X16	1/2"			7	30.2	16.7		
1JFL-08-12	U3/4"X16	3/4"			7	38.1	16.7		
1JFL-10-08	U7/8"X14	1/2"			7	30.2	19.5		
1JFL-10-12	U7/8"X14	3/4"			7	38.1	19.5		
1JFL-12-08	U1.1/16"X12	1/2"			7	30.2	22		
1JFL-12	U1.1/16"X12	3/4"			7	38.1	22		
1JFL-12-16	U1.1/16"X12	1"			8.2	44.4	22		
1JFL-16-12	U1.5/16"X12	3/4"			7	38.1	23		
1JFL-16	U1.5/16"X12	1"			8.2	44.4	23		
1JFL-16-20	U1.5/16"X12	1.1/4"			8.2	50.8	23		
1JFL-20-16	U1.5/8"X12	1"			8.2	44.4	24.5		
1JFL-20	U1.5/8"X12	1.1/4"			8.2	50.8	24.5		
1JFL-20-24	U1.5/8"X12	1.1/2"			8.2	60.3	24.5		
1JFL-24-20	U1.7/8"X12	1.1/4"			8.2	50.8	27.5		
1JFL-24	U1.7/8"X12	1.1/2"			8.2	60.3	27.5		
1JFL-24-32	U1.7/8"X12	2"			9.8	71.4	27.5		
1JFL-32	U2.1/2"X12	2"			9.8	71.4	34		

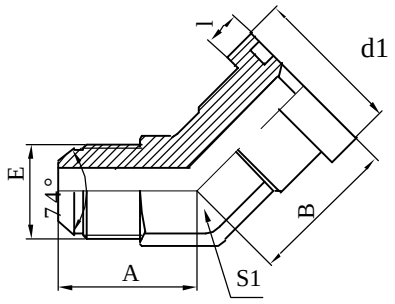

1JFL4

45°美制JIC外螺纹74°外锥/轻系列法兰
45°JIC MALE 74°CONE/L-ERIES FLANGE

代号 PART NO.	螺纹 THREADE	法兰型号 FLANGE SIZE			尺 寸 DIMENSIONS				
	E				l	d1	A	B	S1
1JFL4-08	U3/4"X16	1/2"			7	30.2	25	37	19
1JFL4-10-08	U7/8"X14	1/2"			7	30.2	27	37	22
1JFL4-10-12	U7/8"X14	3/4"			7	38.1	33	40.1	27
1JFL4-12	U1.1/16"X12	3/4"			7	38.1	33	40.1	27
1JFL4-12-16	U1.1/16"X12	1"			8.2	44.4	37	47	33
1JFL4-16	U1.5/16"X12	1"			8.2	44.4	37	47	33
1JFL4-16-12	U1.5/16"X12	3/4"			7	38.1	37	42	33
1JFL4-16-20	U1.5/16"X12	1.1/4"			8.2	50.8	40	51.8	44
1JFL4-20	U1.5/8"X12	1.1/4"			8.2	50.8	40	51.8	44
1JFL4-20-16	U1.5/8"X12	1"			8.2	44.4	40	51	44
1JFL4-20-24	U1.5/8"X12	1.1/2"			8.2	60.3	47	60.5	53
1JFL4-24-20	U1.7/8"X12	1.1/4"			8.2	50.8	47	54	53
1JFL4-24	U1.7/8"X12	1.1/2"			8.2	60.3	47	60.5	53
1JFL4-32	U2.1/2"X12	2"			9.8	71.4	55	76.2	65

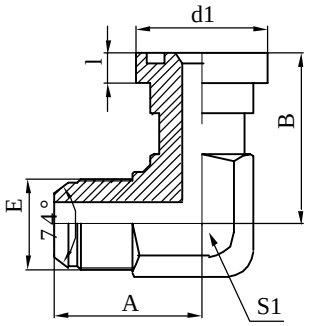

1JFL9

90°美制JIC外螺纹74°外锥/轻系列法兰
90°JIC MALE 74°CONE/L-ERIES FLANGE

代号 PART NO.	螺纹 THREADE	法兰型号 FLANGE SIZE			尺 寸 DIMENSIONS				
	E				l	d1	A	B	S1
1JFL9-08	U3/4"X16	1/2"			7	30.2	33	44	19
1JFL9-10-08	U7/8"X14	1/2"			7	30.2	37	44	22
1JFL9-10-12	U7/8"X14	3/4"			7	38.1	43	54.1	27
1JFL9-12	U1.1/16"X12	3/4"			7	38.1	40	40.1	27
1JFL9-12-16	U1.1/16"X12	1"			8.2	44.4	49	60.2	33
1JFL9-16	U1.5/16"X12	1"			8.2	44.4	49	60.2	33
1JFL9-16-12	U1.5/16"X12	3/4"			7	38.1	49	58	33
1JFL9-16-20	U1.5/16"X12	1.1/4"			8.2	50.8	57	66.5	44
1JFL9-20	U1.5/8"X12	1.1/4"			8.2	50.8	57	66.5	44
1JFL9-20-16	U1.5/8"X12	1"			8.2	44.4	57	65	44
1JFL9-20-24	U1.5/8"X12	1.1/2"			8.2	60.3	57	79.3	48
1JFL9-24-20	U1.7/8"X12	1.1/4"			8.2	50.8	57	75.5	48
1JFL9-24	U1.7/8"X12	1.1/2"			8.2	60.3	57	79.3	48
1JFL9-32	U2.1/2"X12	2"			9.8	71.4	66	108	65

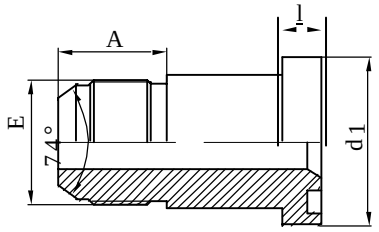

1JFS

美制JIC外螺纹74°外锥/重系列法兰
JIC MALE 74°CONE/S-ERIES FLANGE

代号 PART NO.	螺纹 THREADE	法兰型号 FLANGE SIZE			尺 寸 DIMENSIONS				
	E				l	d1	A		
1JFS-08	U3/4"X16	1/2"			7.9	31.7	16.7		
1JFS-10-08	U7/8"X14	1/2"			7.9	31.7	19.5		
1JFS-10-12	U7/8"X14	3/4"			8.9	41.3	22		
1JFS-12	U1.1/16"X12	3/4"			8.9	41.3	22		
1JFS-12-16	U1.1/16"X12	1"			8.9	41.3	22		
1JFS-16	U1.5/16"X12	1"			9.6	47.6	23		
1JFS-16-12	U1.5/16"X12	3/4"			9.6	47.6	23		
1JFS-16-20	U1.5/16"X12	1.1/4"			9.6	47.6	23		
1JFS-20	U1.5/8"X12	1.1/4"			10.4	54	24.5		
1JFS-20-16	U1.5/8"X12	1"			10.4	54	24.5		
1JFS-20-24	U1.5/8"X12	1.1/2"			10.4	54	24.5		
1JFS-24-20	U1.7/8"X12	1.1/4"			12.7	63.5	27.5		
1JFS-24	U1.7/8"X12	1.1/2"			12.7	63.5	27.5		

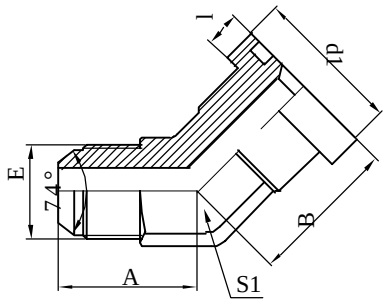

1JFS4

45°美制JIC外螺纹74°外锥/重系列法兰
45°JIC MALE 74°CONE/S-ERIES FLANGE

代号 PART NO.	螺纹 THREADE	法兰型号 FLANGE SIZE			尺 寸 DIMENSIONS				
	E				l	d1	A	B	S1
1JFS4-08	U3/4"X16	1/2"			7.9	31.7	25	38	19
1JFS4-10-08	U7/8"X14	1/2"			7.9	31.7	27	39	22
1JFS4-10-12	U7/8"X14	3/4"			8.9	41.3	27	40.1	22
1JFS4-12	U1.1/16"X12	3/4"			8.9	41.3	33	40.1	27
1JFS4-12-16	U1.1/16"X12	1"			8.9	41.3	37	47	33
1JFS4-16	U1.5/16"X12	1"			9.6	47.6	37	47	33
1JFS4-16-12	U1.5/16"X12	3/4"			9.6	47.6	37	45	33
1JFS4-16-20	U1.5/16"X12	1.1/4"			9.6	47.6	40	52	44
1JFS4-20	U1.5/8"X12	1.1/4"			10.4	54	40	52	44
1JFS4-20-16	U1.5/8"X12	1"			10.4	54	40	52	44
1JFS4-20-24	U1.5/8"X12	1.1/2"			10.4	54	40	60.5	44
1JFS4-24	U1.7/8"X12	1.1/2"			12.7	63.5	47	27.5	53

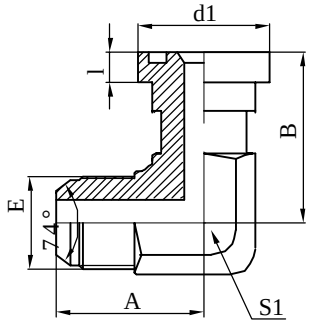

1JFS9

90°美制JIC外螺纹74°外锥/重系列法兰
90°JIC MALE 74°CONE/S-ERIES FLANGE

代号 PART NO.	螺纹 THREADE	法兰型号 FLANGE SIZE			尺 寸 DIMENSIONS				
	E				l	d1	A	B	S1
1JFS9-08	U3/4"X16	1/2"			7.9	31.7	33	44	19
1JFS9-10-08	U7/8"X14	1/2"			7.9	31.7	37	46	22
1JFS9-10-12	U7/8"X14	3/4"			8.9	41.3	37	54.1	22
1JFS9-12	U1.1/16"X12	3/4"			8.9	41.3	40	54.1	27
1JFS9-12-16	U1.1/16"X12	1"			8.9	41.3	49	60.2	33
1JFS9-16	U1.5/16"X12	1"			9.6	47.6	49	60.2	33
1JFS9-16-12	U1.5/16"X12	3/4"			9.6	47.6	49	57	33
1JFS9-16-20	U1.5/16"X12	1.1/4"			9.6	47.6	57	66.5	44
1JFS9-20	U1.5/8"X12	1.1/4"			10.4	54	57	66.5	44
1JFS9-20-16	U1.5/8"X12	1"			10.4	54	57	65	44
1JFS9-20-24	U1.5/8"X12	1.1/2"			10.4	54	57	79.3	44
1JFS9-24	U1.7/8"X12	1.1/2"			12.7	63.5	57	79.3	48

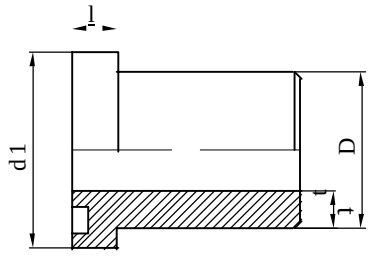

1FLW

轻系列法兰/焊接管
L-SERIES FLANGE/BUTT-WELD TUBE

代号 PART NO.	法兰型号 FLANGE SIZE	DXt			尺 寸 DIMENSIONS				
					l	d1	D		
1FLW-08-16X2	1/2"	16x2			7	30.2	16		
1FLW-08-20X2.5	1/2"	20x2.5			7	30.2	20		
1FLW-12-25X3	3/4"	25x3			7	38.1	25		
1FLW-16-25X3	1"	25x3			8.2	44.4	25		
1FLW-16-28X3	1"	28x3			8.2	44.4	28		
1FLW-16-30X4	1"	30x4			8.2	44.4	30		
1FLW-16-38X5	1"	38x5			8.2	44.4	38		
1FLW-20-25X3	1.1/4"	25x3			8.2	50.8	25		
1FLW-20-30X4	1.1/4"	30x4			8.2	50.8	30		
1FLW-20-38X5	1.1/4"	38x5			8.2	50.8	38		
1FLW-20-42X6	1.1/4"	42x6			8.2	50.8	42		
1FLW-24-38X4	1.1/2"	38x4			8.2	60.3	38		
1FLW-24-42X6	1.1/2"	42x6			8.2	60.3	42		
1FLW-24-45X5	1.1/2"	45x5			8.2	60.3	45		
1FLW-24-50X6	1.1/2"	50x6			8.2	60.3	50		
1FLW-32-55X5	2"	55x5			9.8	71.4	55		
1FLW-32-60X8	2"	60x8			9.8	71.4	60		
1FLW-40-65X6	2.1/2"	65x6							
1FLW-40-70X7.5	2.1/2"	70x7.5							
1FLW-48-80X6	3"	80x6							
1FLW-48-90X8	3"	90x8							

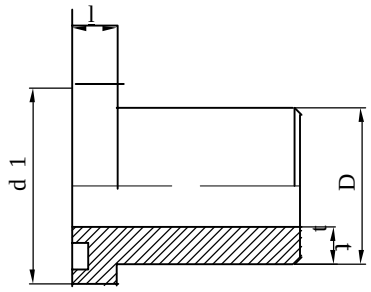

1FSW

重系列法兰/焊接管
S-SERIES FLANGE/BUTT-WELD TUBE

代号 PART NO.	法兰型号 FLANGE SIZE	DXt			尺 寸 DIMENSIONS				
					l	d1	D		
1FSW-08-16X2	1/2"	16x2			7.9	31.7	16		
1FSW-08-20X2.5	1/2"	20x2.5			7.9	31.7	20		
1FSW-12-16X2	3/4"	16x2			8.9	41.3	16		
1FSW-12-20X2.5	3/4"	20x2.5			8.9	41.3	20		
1FSW-12-25X4	3/4"	25x4			8.9	41.3	25		
1FSW-16-25X3	1"	25x3			9.6	47.6	25		
1FSW-16-30X4	1"	30x4			9.6	47.6	30		
1FSW-16-38X5	1"	38x5			9.6	47.6	38		
1FSW-20-25X3	1.1/4"	25x3			10.4	54	25		
1FSW-20-30X4	1.1/4"	30x4			10.4	54	30		
1FSW-20-38X5	1.1/4"	38x5			10.4	54	38		
1FSW-20-42X6	1.1/4"	42x6			10.4	54	42		
1FSW-24-38X5	1.1/2"	38x5			12.7	63.5	38		
1FSW-24-45X6.5	1.1/2"	45x2.5			12.7	63.5	45		
1FSW-24-48X8	1.1/2"	48x8			12.7	63.5	48		
1FSW-24-50X8	1.1/2"	50x8			12.7	63.5	50		
1FSW-32-60X8	2"	60x8			12.7	71.4	60		
1FSW-32-60X10	2"	60x10			12.7	71.4	60		

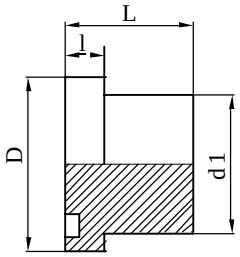

4FL

轻系列法兰堵头
L-SERIES FLANGE PLUG

代号 PART NO.	法兰型号 FLANGE SIZE			尺 寸 DIMENSIONS					
				D	d1	l	L		
4FL-08	1/2"			30.2	24	7	16		
4FL-12	3/4"			38.1	31.5	7	17		
4FL-16	1"			44.4	38	8.2	17		
4FL-20	1.1/4"			50.8	43	8.2	17		
4FL-24	1.1/2"			60.3	50	8.2	19		
4FL-32	2"			71.4	62	9.8	19		
4FL-40	2.1/4"			84.1	74	9.8	40		
4FL-48	3"			101.6	90	9.8	45		

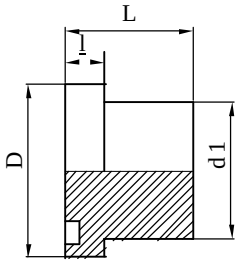

4FS

重系列法兰堵头
S-SERIES FLANGE PLUG

代号 PART NO.	法兰型号 FLANGE SIZE			尺 寸 DIMENSIONS					
				D	d1	l	L		
4FS-08	1/2"			31.7	24	7.9	18		
4FS-12	3/4"			41.3	32	8.9	18		
4FS-16	1"			47.6	38	9.6	18		
4FS-20	1.1/4"			54	44	10.4	18		
4FS-24	1.1/2"			63.5	51	12.7	20		
4FS-32	2"			79.4	67	12.7	30		

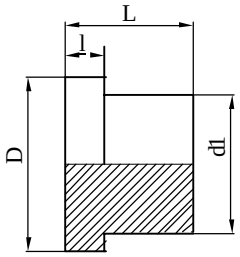

4FL-M

轻系列平面法兰堵头
L-SERIES FLANGE PLUG

代号 PART NO.	法兰型号 FLANGE SIZE			尺 寸 DIMENSIONS					
				D	d1	l	L		
4FL-08M	1/2"			30.2	24	7	16		
4FL-12M	3/4"			38.1	31.5	7	17		
4FL-16M	1"			44.4	38	8.2	17		
4FL-20M	1.1/4"			50.8	43	8.2	17		
4FL-24M	1.1/2"			60.3	50	8.2	19		
4FL-32M	2"			71.4	62	9.8	19		
4FL-40M	2.1/4"			84.1	74	9.8	40		
4FL-48M	3"			101.6	90	9.8	45		

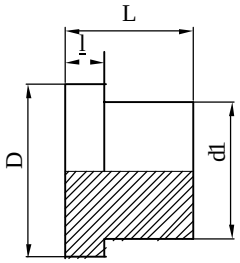

4FS-M

重系列平面法兰堵头
S-SERIES FLANGE PLUG

代号 PART NO.	法兰型号 FLANGE SIZE			尺 寸 DIMENSIONS					
				D	d1	l	L		
4FS-08M	1/2"			31.7	24	7.9	18		
4FS-12M	3/4"			41.3	32	8.9	18		
4FS-16M	1"			47.6	38	9.6	18		
4FS-20M	1.1/4"			54	44	10.4	18		
4FS-24M	1.1/2"			63.5	51	12.7	20		
4FS-32M	2"			79.4	67	12.7	30		